Product datasheet

Specifications

Green Premium™

green light block with body/fixing collar integral LED 24V

ZB5AVB34

Discontinued on: 1 Jul 2020

Discontinued

Main

Range Of Product	Harmony XB5
Product Or Component Type	Complete body/light block assembly
Device Short Name	ZB5
Fixing Collar Material	Plastic
Sale Per Indivisible Quantity	1
Connections - Terminals	Connector not supplied
Light Source	Protected LED
Bulb Base	Integral LED
Light Source Colour	Green

Complementary

Cad Overall Width	30 mm
Cad Overall Height	42 mm
Cad Overall Depth	32 mm
Terminals Description Iso N°1	(X1-X2)PL
Net Weight	0.021 kg
[Ui] Rated Insulation Voltage	250 V (pollution degree 3) conforming to EN 60947-1
[Uimp] Rated Impulse Withstand Voltage	4 kV conforming to EN 60947-1
Signalling Type	Steady
[Us] Rated Supply Voltage	24 V AC/DC at 50/60 Hz
Supply Voltage Limits	19.2…30 V DC 21.6…26.4 V AC
Current Consumption	18 mA
Service Life	100000 h at rated voltage and 25 °C
Surge Withstand	1 kV conforming to IEC 61000-4-5

Environment

Protective Treatment	TH
Ambient Air Temperature For Storage	-40…70 °C
Ambient Air Temperature For Operation	-40…70 °C
Electrical Shock Protection Class	Class II conforming to IEC 60536

Disclaimer: This documentation is not intended as a substitute for and is not to be used for determining suitability or reliability of these products for specific user applications

Standards	UL 508 EN/IEC 60947-5-1 EN/IEC 60947-1 JIS C8201-5-1 CSA C22.2 No 14 EN/IEC 60947-5-4 JIS C8201-1
Product Certifications	UL listed CSA
Vibration Resistance	5 gn (f= 2…500 Hz) conforming to IEC 60068-2-6
Shock Resistance	30 gn (duration = 18 ms) for half sine wave acceleration conforming to IEC 60068-2-27 50 gn (duration = 11 ms) for half sine wave acceleration conforming to IEC 60068-2-27
Resistance To Fast Transients	2 kV conforming to IEC 61000-4-4
Resistance To Electromagnetic Fields	10 V/m conforming to IEC 61000-4-3
Resistance To Electrostatic Discharge	6 kV on contact (on metal parts) conforming to IEC 61000-2-6 8 kV in free air (in insulating parts) conforming to IEC 61000-2-6
Electromagnetic Emission	Class B conforming to IEC 55011

Packing Units

Unit Type Of Package 1	PCE
Number Of Units In Package 1	1
Package 1 Height	3.4 cm
Package 1 Width	5.4 cm
Package 1 Length	5.6 cm
Package 1 Weight	21 g

Contractual warranty

Warranty	18 months

Sustainability

Green Premium™ label is Schneider Electric's commitment to delivering products with best-in-class environmental performance. Green Premium promises compliance with the latest regulations, transparency on environmental impacts, as well as circular and low-CO_2 products.

Guide to assessing product sustainability is a white paper that clarifies global eco-label standards and how to interpret environmental declarations.

Learn more about Green Premium >

Guide to assess a product's sustainability >

Transparency RoHS/REACh

Well-being performance

Mercury Free

Rohs Exemption Information	Yes

Certifications & Standards

Reach Regulation	REACh Declaration
Eu Rohs Directive	Pro-active compliance (Product out of EU RoHS legal scope)
China Rohs Regulation	China RoHS declaration
Environmental Disclosure	Product Environmental Profile
Weee	The product must be disposed on European Union markets following specific waste collection and never end up in rubbish bins
Circularity Profile	End of Life Information

Dimensions Drawings

Dimensions

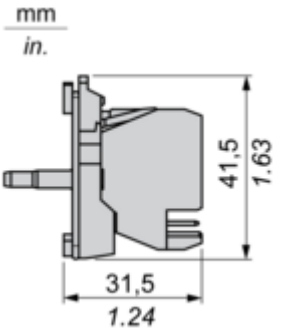

Mounting and Clearance

Panel Cut-out for Pushbuttons, Switches and Pilot Lights (Finished Holes, Ready for Installation)

Connection by Screw Clamp Terminals or Plug-in Connectors or on Printed Circuit Board

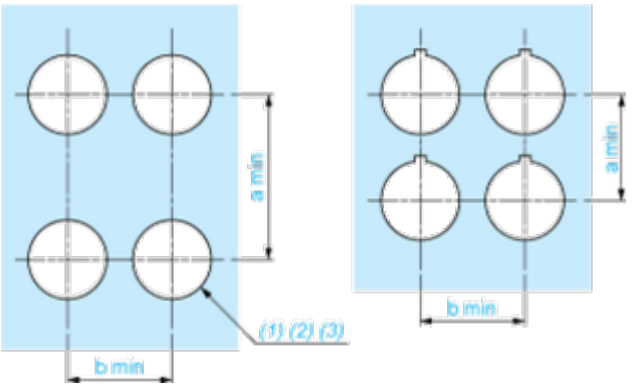

(1) Diameter on finished panel or support
(2) For selector switches and Emergency stop buttons, use of an anti-rotation plate type ZB5AZ902 is recommended.
(3) Ø22.5 mm recommended (Ø22.3 $_{0}^{+0.4}$) / Ø0.89 in. recommended (Ø0.88 in. $_{0}^{+0.016}$)

Connections	a in mm	a in in.	b in mm	b in in.
By screw clamp terminals or plug-in connector	40	1.57	30	1.18
By Faston connectors	45	1.77	32	1.26
On printed circuit board	30	1.18	30	1.18

Detail of Lug Recess

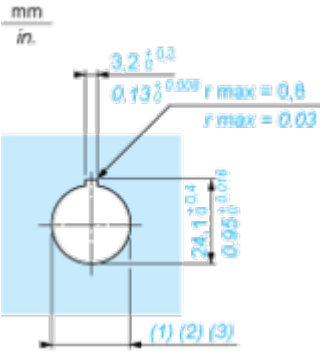

(1) Diameter on finished panel or support
(2) For selector switches and Emergency stop buttons, use of an anti-rotation plate type ZB5AZ902 is recommended.
(3) Ø22.5 mm recommended (Ø22.3 $_{0}^{+0.4}$) / Ø0.89 in. recommended (Ø0.88 in. $_{0}^{+0.016}$)