Product datasheet

Specifications

Green Premium™

discrete I/O module Modicon Quantum - 16 I - 24 V DC - 8 O solid state

140DDM39000

Main

Range Of Product	Modicon Quantum automation platform
Product Or Component Type	Mixed discrete I/O module
Discrete I/O Number	24

Complementary

Discrete Input Number	16 2 groups of 8
Discrete Input Logic	Sink
Addressing Requirement	1 input word 0.5 output word
Network Frequency Limits	47…63 Hz
Discrete Input Voltage	24 V DC
Input Voltage Limits	30 V <= 1 V during one cycle 56 V during 1.3 ms <= 1 V during 10 s
Voltage State 0 Guaranteed	-3...5 V
Voltage State 1 Guaranteed	15...30 V
Current State 0 Guaranteed	<= 0.5 mA
Current State 1 Guaranteed	>= 2 mA
Input Impedance	2500 Ohm
Discrete Output Number	8 2 groups of 4
Discrete Output Type	Solid state
Discrete Output Logic	Sink
Discrete Output Voltage	24 V
Output Voltage Limits	19.2...30 V DC typical 56 V DC during 1.3 ms
Maximum Load Current	<= 0.5 A per point <= 2 A per group <= 4 A per module
Maximum Voltage Drop	<0.4 V 0.5 A
Absolute Maximum Output	5 A during 500 µs per point
Maximum Load Inductance	500 mH at 4 Hz
Maximum Load Capacitance	50 µF
Maximum Leakage Current	0.4 mA 30 V DC

Disclaimer: This documentation is not intended as a substitute for and is not to be used for determining suitability or reliability of these products for specific user applications

Response Time On Output	<= 1 ms at state 0 to state 1 <= 1 ms at state 1 to state 0
Protection Type	On output by transient voltage suppression On input by resistor limited Internal output protection by 5 A fuse per group
Associated Fuse Rating	5 A per group
Isolation Between Group	500 Vrms for 1 minute
Isolation Between Group And Bus	1780 Vrms for 1 minute
Fault Indication	Blown fuse on output Loss of field power on output
Power Dissipation	1.75 W + (0.36 x input point on) + (1.1 total output load current)
Local Signalling	1 LED (green) for bus communication is present (Active) 1 LED (red) for no voltage in output and input (F) 2 LEDs (green) for output is turned on 2 LEDs (red) for fault detected on the input point 2 LEDs (red) for fault detected on the output point
Marking	CE
Bus Current Requirement	330 mA
Net Weight	0.3 kg

Environment

Resistance To Electrostatic Discharge	4 kV contact conforming to IEC 801-2 8 kV on air conforming to IEC 801-2
Resistance To Electromagnetic Fields	10 V/m 80…1000 MHz conforming to IEC 801-3
Ambient Air Temperature For Operation	0…60 °C
Ambient Air Temperature For Storage	-40…85 °C
Relative Humidity	95 % without condensation
Operating Altitude	<= 5000 m
Standards	CSA C22.2 No 142 UL 508 FM Class 1 Division 2
Product Certifications	cUL

Packing Units

Unit Type Of Package 1	PCE
Number Of Units In Package 1	1
Package 1 Height	16.3 cm
Package 1 Width	4.5 cm
Package 1 Length	31.2 cm
Package 1 Weight	426.0 g
Unit Type Of Package 2	S03
Number Of Units In Package 2	7
Package 2 Height	30.0 cm
Package 2 Width	30.0 cm
Package 2 Length	40.0 cm
Package 2 Weight	3.039 kg

Contractual warranty

Warranty	18 months

Sustainability

Green Premium™ label is Schneider Electric's commitment to delivering products with best-in-class environmental performance. Green Premium promises compliance with the latest regulations, transparency on environmental impacts, as well as circular and low-CO_2 products.

Guide to assessing product sustainability is a white paper that clarifies global eco-label standards and how to interpret environmental declarations.

Learn more about Green Premium >

Guide to assess a product's sustainability >

RoHS/REACh

Well-being performance

Reach Free Of Svhc	
Mercury Free	
Rohs Exemption Information	Yes

Certifications & Standards

Eu Rohs Directive	Pro-active compliance (Product out of EU RoHS legal scope) EU RoHS Declaration
China Rohs Regulation	China RoHS declaration
Weee	The product must be disposed on European Union markets following specific waste collection and never end up in rubbish bins
Circularity Profile	End of Life Information

Dimensions Drawings

Racks for Modules Mounting

Dimensions of Modules and Racks

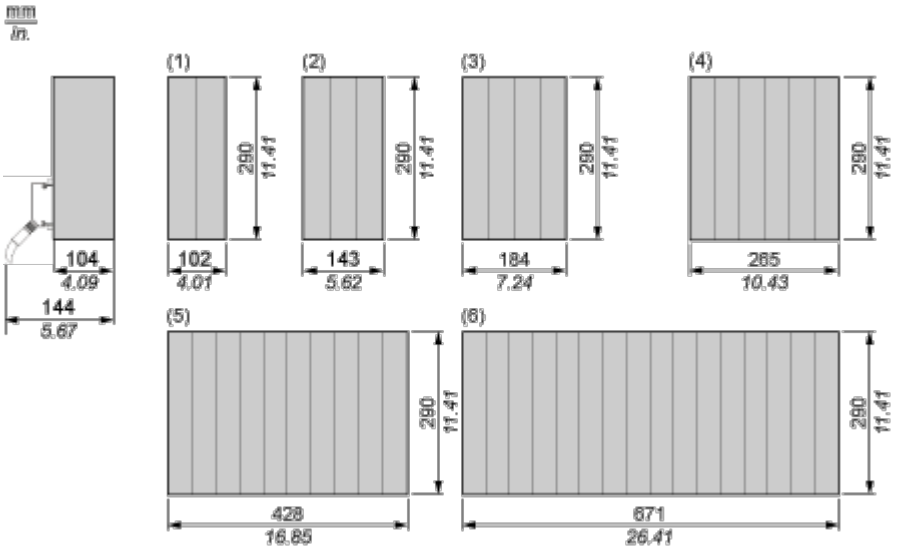

(1) 2 slots

(2) 3 slots

(3) 4 slots

(4) 6 slots

(5) 10 slots

(6) 16 slots

Connections and Schema

24 Vdc Discrete Input Sink/Output Source Module

Wiring Diagram

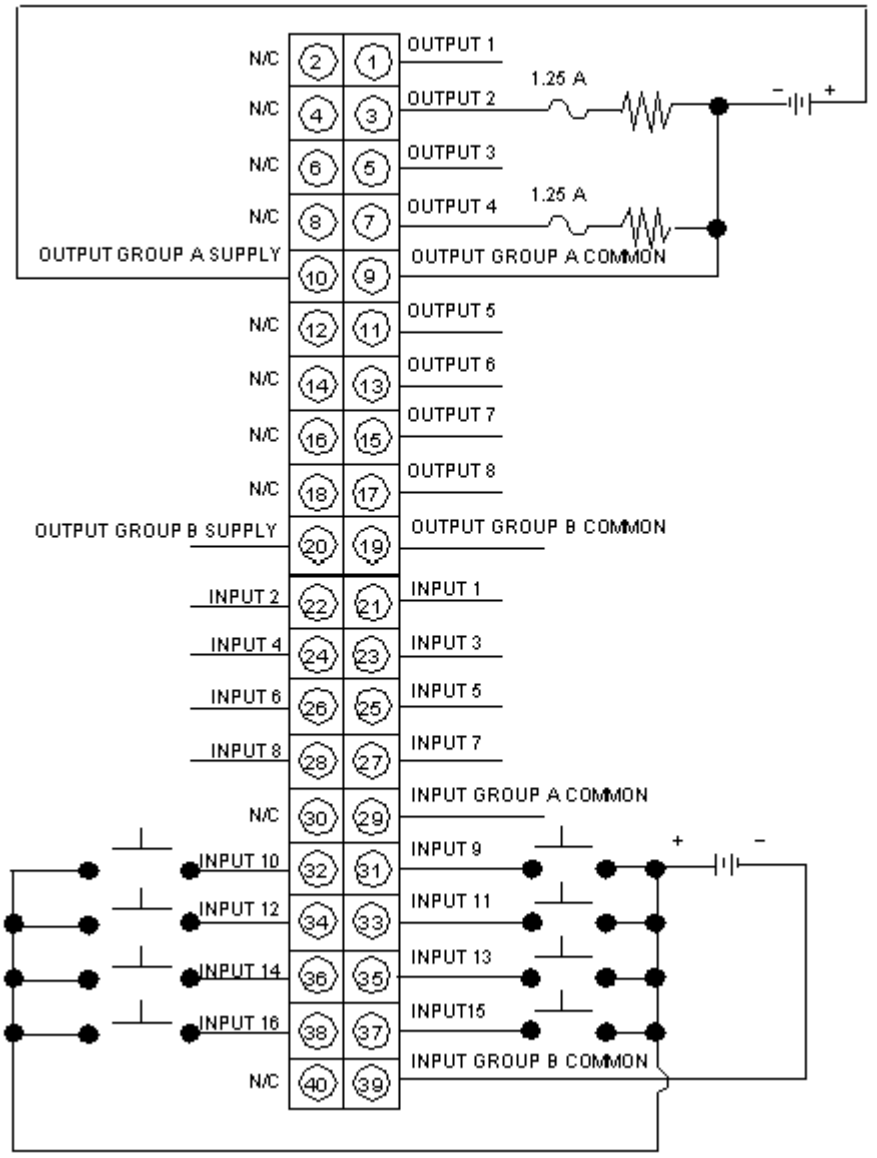

N/C Not Connected