Product datasheet

Specifications

Green Premium™

processor module M580 - Level 4 - Remote

BMEP584040

Main

Range Of Product	Modicon M580
Product Or Component Type	Processor module

Complementary

Number Of Racks	8
Local I/O Processor Capacity (Discrete)	4096 I/O
Local I/O Processor Capacity (Analog)	1024 I/O
Number Of Application Specific Channel (Local Rack)	144
Application Specific I/O	Counter SSI encoder Motion control Accurate time stamping HART Serial link
Checks	Process control
Control Channels	Programmable loops
Integrated Connection Type	1 Ethernet TCP/IP for service port 2 Ethernet TCP/IP for device network USB type mini B
Number Of Remote I/O Station	16 - 2 rack(s) per remote drop
Number Of Distributed Equipment	64
Communication Module Processor Capacity	8 AS-Interface module 4 Ethernet communication module
Communication Service	RIO scanner DIO scanner
Memory Description	Expandable flash, 4 GB for data storage Integrated RAM, 10 kB for system memory Integrated RAM, 16 MB for program Integrated RAM, 2048 kB for data
Application Structure	2 auxiliary tasks 1 cyclic/periodic master task 1 periodic fast task 128 event tasks

Disclaimer: This documentation is not intended as a substitute for and is not to be used for determining suitability or reliability of these products for specific user applications

Cybersecurity	Achilles certified DoS prevention IPSec SNMP logging Syslog protocol support Transport layer security Audit trail Embedded firewall Firmware signature Password protection Port hardening Secure communiction (HTTPS) Security log
Number Of Instructions Per Ms	30 Kinst/ms 65 % Boolean + 35 % fixed arithmetic 40 Kinst/ms 100 % Boolean
Current Consumption	295 mA at 24 V DC
Mtbf Reliability	775000 H
Marking	CE

Environment

Vibration Resistance	3 gn
Shock Resistance	30 gn
Ambient Air Temperature For Operation	0…60 °C
Ambient Air Temperature For Storage	-40…85 °C
Operating Altitude	0...2000 m 2000...5000 m with derating factor
Relative Humidity	5…95 % at 55 °C without condensation
Ip Degree Of Protection	IP20
Directives	2014/35/EU - low voltage directive 2014/30/EU - electromagnetic compatibility
Product Certifications	CE UL CSA RCM EAC Merchant Navy
Standards	IEC 61131-2 IEC 61010-2-201 UL 61010-2-201 CSA C22.2 No 61010-2-201 IACS E10 EN/IEC 61000-6-5, interface type 1 and type 2 EN/IEC 61850-3, location G
Environmental Characteristic	Hazardous location class I division 2
Supply	Internal power supply via rack
Status Led	1 LED (green) processor running (RUN) 1 LED (red) processor or system fault (ERR) 1 LED (red) I/O module fault (I/O) 1 LED (green) download in progress (DL) 1 LED (red) memory card or CPU flash fault (BACKUP) 1 LED (green/red) ETH MS (Ethernet port configuration status) 1 LED (green/red) Eth NS (Ethernet network status)
Net Weight	0.849 kg

Packing Units

Unit Type Of Package 1	PCE
Number Of Units In Package 1	1

Package 1 Height	8.800 cm
Package 1 Width	17.300 cm
Package 1 Length	25.000 cm
Package 1 Weight	875.000 g
Unit Type Of Package 2	S03
Number Of Units In Package 2	6
Package 2 Height	30.000 cm
Package 2 Width	30.000 cm
Package 2 Length	40.000 cm
Package 2 Weight	5.630 kg

Sustainability

Green Premium™ label is Schneider Electric's commitment to delivering products with best-in-class environmental performance. Green Premium promises compliance with the latest regulations, transparency on environmental impacts, as well as circular and low-CO_2 products.

Guide to assessing product sustainability is a white paper that clarifies global eco-label standards and how to interpret environmental declarations.

Learn more about Green Premium >

Guide to assess a product's sustainability >

Transparency RoHS/REACh

Well-being performance

Mercury Free

Rohs Exemption Information	Yes

Certifications & Standards

Reach Regulation	REACh Declaration
Eu Rohs Directive	Pro-active compliance (Product out of EU RoHS legal scope)
China Rohs Regulation	China RoHS declaration
Environmental Disclosure	Product Environmental Profile
Weee	The product must be disposed on European Union markets following specific waste collection and never end up in rubbish bins
Circularity Profile	End of Life Information

Dimensions Drawings

CPU Module Only

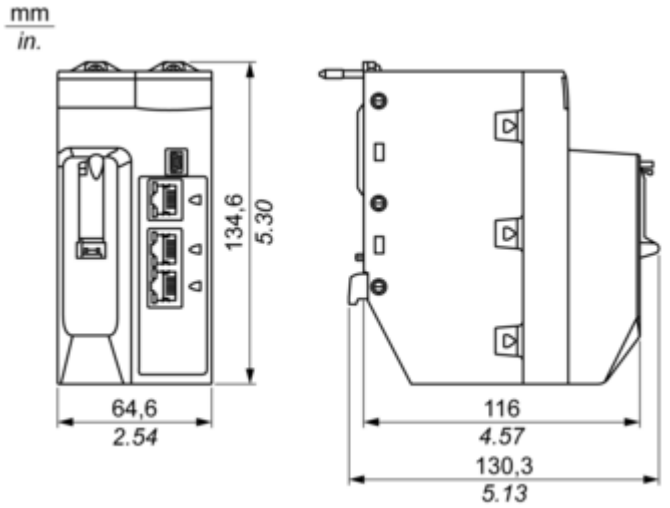

Modules Mounted on Racks

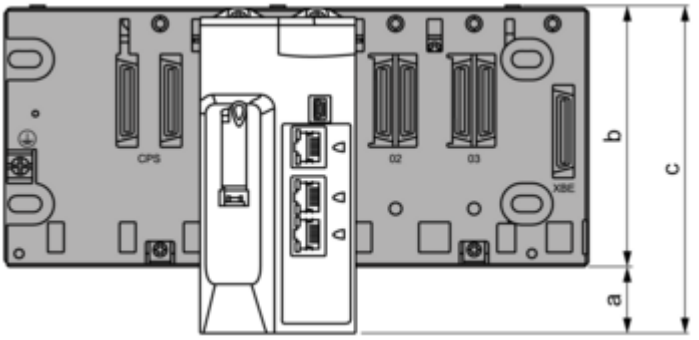

a: additional space below the rack to accommodate the height of the CPU. For an X Bus rack, the value is 30.9 mm (1.217 in.); for an Ethernet rack, the value is 29.49 mm (1.161 in.).
b: the height of the rack. For an X Bus rack, the height is 103.7 mm (4.083 in.); for an Ethernet rack, the height is 105.11 mm (4.138 in.).
c: the height of the main local rack, 134.6 mm (5.299 in.)

Modules and Cables Mounted in an Enclosure

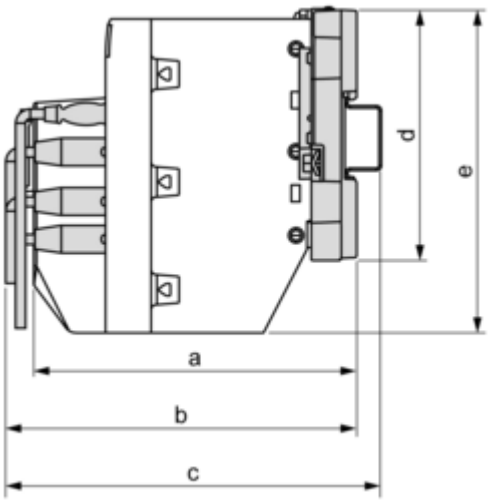

a: enclosure depth: 135 mm (5.315 in.)
b: wiring + module depth: > 146 mm (5.748 in.)
c: wiring + module + DIN rail depth: > 156 mm (6.142 in.)
d: rack height: for an X Bus rack 103.7 mm (4.083 in.); for an Ethernet rack, 105.11 mm (4.138 in.)
e: module height: 134.6 mm (5.299 in.)