Product datasheet

Specifications

Green Premium™

mounting adaptor for DIN rail - for relays RXM and RPM

RXZE2DA

Discontinued on: 1 Jul 2020

Discontinued

Main

Product Or Component Type	Adaptor
Accessory / Separate Part Category	Mounting accessories
Accessory / Separate Part Designation	Mounting adaptor for DIN rails
Device Short Name	RXZ
Sale Per Indivisible Quantity	10

Complementary

Product Destination	RPM relay RXM relay
Product Compatibility	Plug-in relay RXM with 2 C/O contact Plug-in relay RXM with 3 C/O contact Plug-in relay RXM with 4 C/O contact Plug-in relay RPM with 2 C/O contact
Shape Of Pin	Flat
Net Weight	0.004 kg
Group Of Product	RXM_RPM_2_C/O_DIN

Packing Units

Unit Type Of Package 1	PCE
Number Of Units In Package 1	1

Contractual warranty

Warranty	12 months

Disclaimer: This documentation is not intended as a substitute for and is not to be used for determining suitability or reliability of these products for specific user applications

Sustainability

Green Premium™ label is Schneider Electric's commitment to delivering products with best-in-class environmental performance. Green Premium promises compliance with the latest regulations, transparency on environmental impacts, as well as circular and low-CO_2 products.

Guide to assessing product sustainability is a white paper that clarifies global eco-label standards and how to interpret environmental declarations.

Learn more about Green Premium >

Guide to assess a product's sustainability >

Transparency RoHS/REACh

Well-being performance

Reach Free Of Svhc	
Toxic Heavy Metal Free	
Mercury Free	
Rohs Exemption Information	Yes

Certifications & Standards

Reach Regulation	REACh Declaration
Eu Rohs Directive	Pro-active compliance (Product out of EU RoHS legal scope) EU RoHS Declaration
China Rohs Regulation	China RoHS declaration
Environmental Disclosure	Product Environmental Profile
Weee	The product must be disposed on European Union markets following specific waste collection and never end up in rubbish bins
Circularity Profile	No need of specific recycling operations

Dimensions Drawings

Dimensions

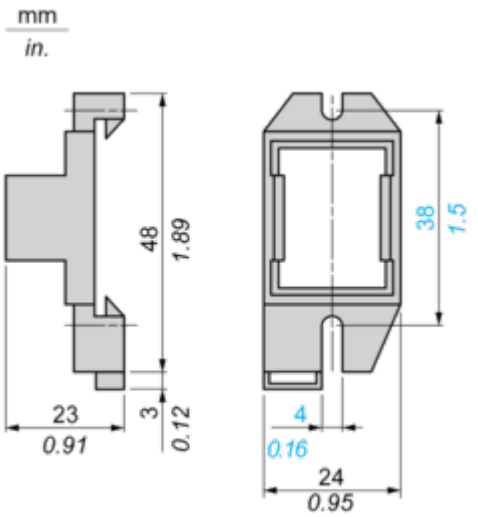

Mounting and Clearance

Mounting Adapter for Rails

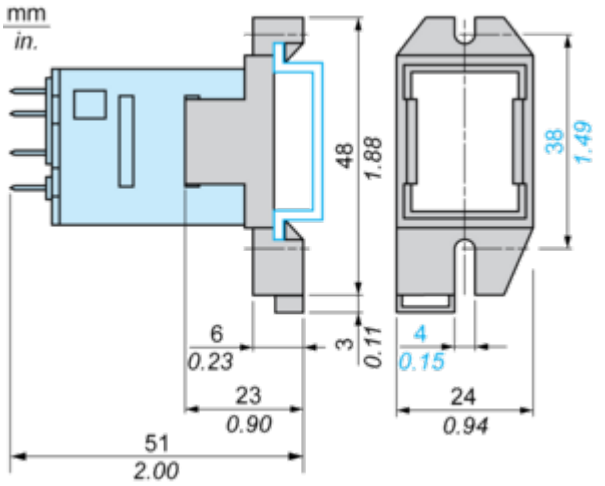

With this mounting type, test button becomes inaccessible.