Product datasheet

Specifications

Discrete I/O module, Modicon TM3, 24 IO (16 inputs, 8 relay outputs, screw) 24 VDC

TM3DM24R

Main

Range Of Product	Modicon TM3
Product Or Component Type	Discrete I/O module
Range Compatibility	Modicon M241 Modicon M251 Modicon M221 Modicon M262
Discrete Input Number	16 for input conforming to IEC 61131-2 Type 1
Discrete Input Logic	Sink or source (positive/negative)
Discrete Input Voltage	24 V
Discrete Input Current	7 mA for input
Discrete Output Type	Relay normally open
Discrete Output Number	8
Discrete Output Logic	Positive or negative
Discrete Output Voltage	24 V DC for relay output 240 V AC for relay output
Discrete Output Current	2000 mA for relay output

Complementary

Discrete I/O Number	24
Current Consumption	5 mA at 5 V DC via bus connector (at state off) 0 mA at 24 V DC via bus connector (at state on) 0 mA at 24 V DC via bus connector (at state off) 65 mA at 5 V DC via bus connector (at state on)
Discrete Input Voltage Type	DC
Voltage State 1 Guaranteed	15...28.8 V for input
Current State 1 Guaranteed	>= 2.5 mA (input)
Voltage State 0 Guaranteed	0...5 V for input
Current State 0 Guaranteed	<= 1 mA (input)
Input Impedance	3.4 kOhm
Response Time	4 ms (turn-on) 4 ms (turn-off)
Maximum Current Per Output Common	7 A
Mechanical Durability	20000000 cycles
Minimum Load	10 mA at 5 V DC for relay output
Local Signalling	1 LED per channel (green) for I/O state

Disclaimer: This documentation is not intended as a substitute for and is not to be used for determining suitability or reliability of these products for specific user applications

Electrical Connection	17 x 1.5 mm² removable screw terminal block with pitch 3.81 mm adjustment for inputs 11 x 1.5 mm² removable screw terminal block with pitch 3.81 mm adjustment for outputs
Maximum Cable Distance Between Devices	Unshielded cable: <30 m for regular input
Insulation	Between input and internal logic at 500 V AC Non-insulated between inputs Between input groups and output groups at 1500 V AC Between open contact at 750 V AC Between output and internal logic at 500 V AC Non-insulated between outputs
Marking	CE
Mounting Support	Top hat type TH35-15 rail conforming to IEC 60715 Top hat type TH35-7.5 rail conforming to IEC 60715 plate or panel with fixing kit
Height	90 mm
Depth	84.6 mm
Width	42.9 mm

Environment

Standards	IEC 61131-2
Product Certifications	cULus CE UKCA RCM EAC cULus HazLoc
Resistance To Electrostatic Discharge	8 kV in air conforming to IEC 61000-4-2 4 kV on contact conforming to IEC 61000-4-2
Resistance To Electromagnetic Fields	10 V/m 80 MHz...1 GHz conforming to IEC 61000-4-3 3 V/m 1.4 GHz...2 GHz conforming to IEC 61000-4-3 1 V/m 2 GHz...3 GHz conforming to IEC 61000-4-3
Resistance To Magnetic Fields	30 A/m 50/60 Hz conforming to IEC 61000-4-8
Resistance To Fast Transients	1 kV for I/O conforming to IEC 61000-4-4 2 kV for relay output conforming to IEC 61000-4-4
Surge Withstand	2 kV output common mode conforming to IEC 61000-4-5 1 kV input common mode conforming to IEC 61000-4-5
Resistance To Conducted Disturbances	10 V 0.15...80 MHz conforming to IEC 61000-4-6 3 V spot frequency (2, 3, 4, 6.2, 8.2, 12.6, 16.5, 18.8, 22, 25 MHz) conforming to Marine specification (LR, ABS, DNV, GL)
Electromagnetic Emission	Radiated emissions - test level: 40 dBµV/m QP class A (10 m) at 30…230 MHz conforming to IEC 55011 Radiated emissions - test level: 47 dBµV/m QP class A (10 m) at 230…1000 MHz conforming to IEC 55011
Ambient Air Temperature For Operation	-10…35 °C vertical installation -10…55 °C horizontal installation
Ambient Air Temperature For Storage	-25…70 °C
Relative Humidity	10…95 %, without condensation (in operation) 10…95 %, without condensation (in storage)
Ip Degree Of Protection	IP20 with protective cover in place
Pollution Degree	2
Operating Altitude	0...2000 m
Storage Altitude	0…3000 m

Vibration Resistance	3.5 mm at 5…8.4 Hz on DIN rail 3 gn at 8.4…150 Hz on DIN rail 3.5 mm at 5…8.4 Hz on panel 3 gn at 8.4…150 Hz on panel
Shock Resistance	15 gn for 11 ms

Packing Units

Unit Type Of Package 1	PCE
Number Of Units In Package 1	1
Package 1 Height	7.551 cm
Package 1 Width	10.686 cm
Package 1 Length	12.849 cm
Package 1 Weight	281.0 g
Unit Type Of Package 2	CAR
Number Of Units In Package 2	42
Package 2 Height	30.6 cm
Package 2 Width	40.1 cm
Package 2 Length	57.6 cm
Package 2 Weight	12.61 kg
Unit Type Of Package 3	P12
Number Of Units In Package 3	504
Package 3 Height	105 cm
Package 3 Width	120 cm
Package 3 Length	80 cm
Package 3 Weight	144 kg

Sustainability

Green Premium™ label is Schneider Electric's commitment to delivering products with best-in-class environmental performance. Green Premium promises compliance with the latest regulations, transparency on environmental impacts, as well as circular and low-CO_2 products.

Guide to assessing product sustainability is a white paper that clarifies global eco-label standards and how to interpret environmental declarations.

Learn more about Green Premium >

Guide to assess a product's sustainability >

Transparency RoHS/REACh

Well-being performance

Reach Free Of Svhc	
Toxic Heavy Metal Free	
Mercury Free	
Rohs Exemption Information	Yes
Pvc Free	

Certifications & Standards

Reach Regulation	REACh Declaration
Eu Rohs Directive	Pro-active compliance (Product out of EU RoHS legal scope) EU RoHS Declaration
China Rohs Regulation	China RoHS declaration
Environmental Disclosure	Product Environmental Profile
Weee	The product must be disposed on European Union markets following specific waste collection and never end up in rubbish bins
Circularity Profile	End of Life Information

Dimensions Drawings

Dimensions

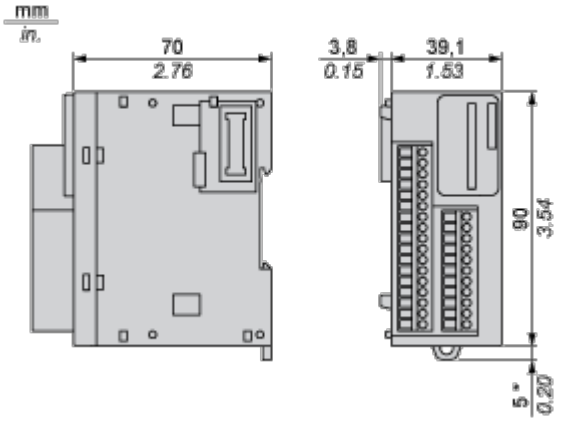

(*) 8.5 mm/0.33 in. when the clamp is pulled out.

Mounting and Clearance

Spacing Requirements

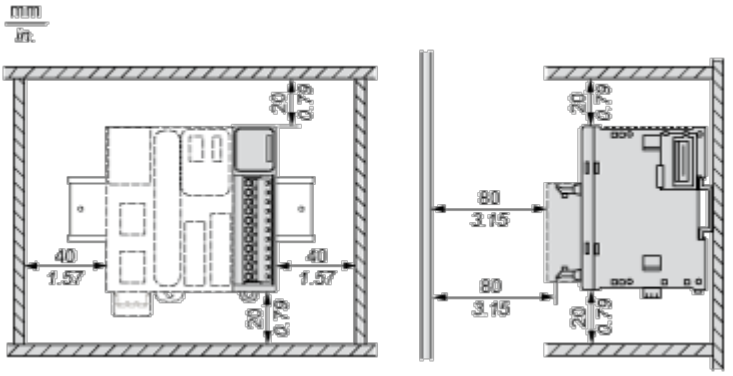

Mounting on a Rail

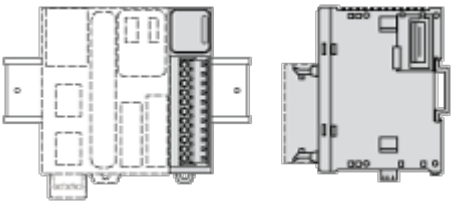

Incorrect Mounting

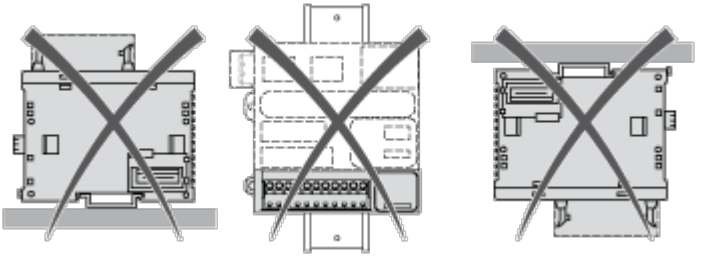

Mounting on a Panel Surface

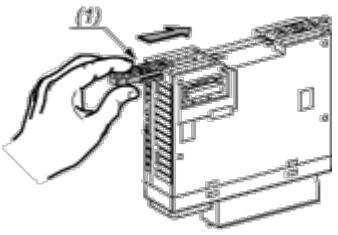

(1) Install a mounting strip

Mounting Hole Layout

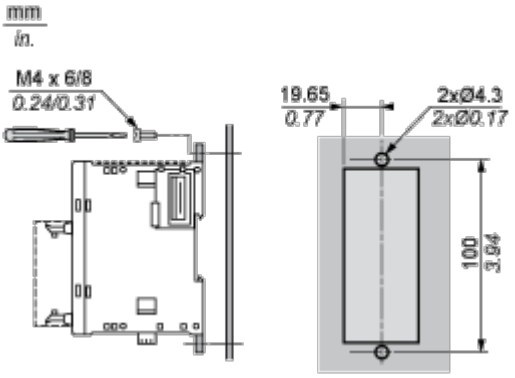

Connections and Schema

Digital Mixed I/O Module (24-channel)

Wiring Diagram (Source)

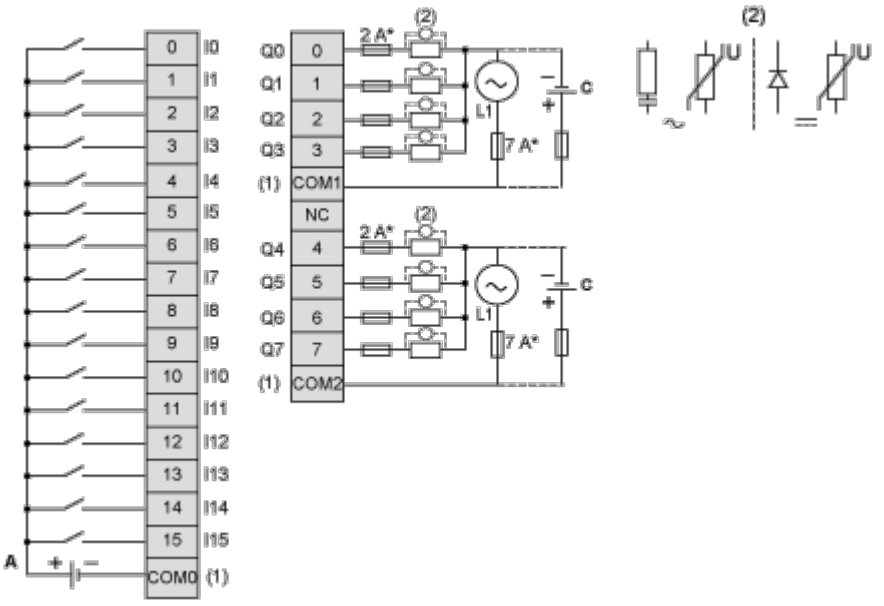

(*) Type T fuse

(1) The COM0, COM1 and COM2 terminals are **not** connected internally.

(2) To improve the life time of the contacts, and to protect from potential inductive load damage, it is recommended to connect a free wheeling diode in parallel to each inductive DC load or an RC snubber in parallel of each inductive AC load.

(A) Sink wiring (positive logic)

(C) Source wiring (positive logic)

Wiring Diagram (Sink)

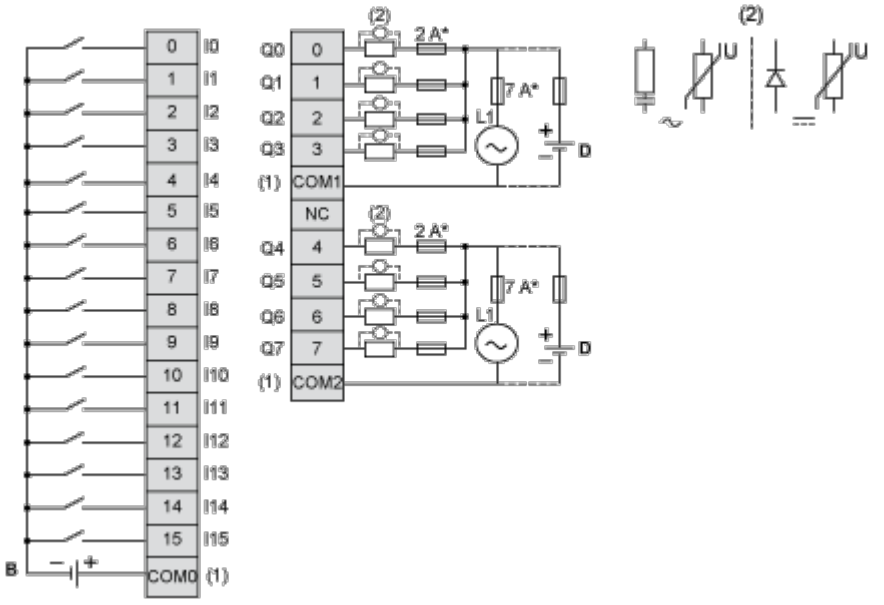

(*) Type T fuse

(1) The COM0, COM1 and COM2 terminals are **not** connected internally.

(2) To improve the life time of the contacts, and to protect from potential inductive load damage, it is recommended to connect a free wheeling diode in parallel to each inductive DC load or an RC snubber in parallel of each inductive AC load.

(B) Source wiring (negative logic)

(D) Sink wiring (negative logic)