Product datasheet

Specifications

Green Premium™

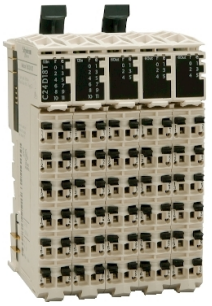

Discontinued - Service only

Compact I/O expansion block, Modicon TM5, 24 I/0, 12 DI, 6 DO transistor, 4 AI, 2 AO

TM5C12D6T6L

Discontinued on: 23 Jan 2021

End-of-service on: 23 Jan 2021

Main

Range Of Product	Modicon TM5
Product Or Component Type	Compact I/O expansion block

Complementary

Enclosure Material	Plastic
Colour	White
Input/Output Number	24
For Enclosure Nominal Dimensions	16 I + 8 O
Number Of Modules	Digital input: 2 module(s) x 6 Digital output: 1 module(s) x 6 Analog input: 1 module(s) x 4 Analog output: 1 module(s) x 2
Discrete Input Number	12
Discrete Input Voltage	24 V
Discrete Input Voltage Type	DC
Input Voltage Limits	20.4...28.8 V
Discrete Input Logic	Sink
Discrete Input Current	3.75 mA
Input Impedance	6.4 kOhm
Analogue Input Number	4
Analogue Input Type	Voltage/current
Analogue Input Range	0...20 mA +/- 10 V 4...20 mA
Analogue Input Resolution	12 bits + sign for voltage 12 bits for current
Discrete Output Number	6
Discrete Output Type	Transistor
Wiring Mode	2-wire for discrete output 2-wire for discrete input
Output Voltage	24 V DC
Output Voltage Limits	20.4...28.8 V DC
Discrete Output Logic	Source

Disclaimer: This documentation is not intended as a substitute for and is not to be used for determining suitability or reliability of these products for specific user applications

Discrete Output Current	0.5 A per output
Analogue Output Number	2
Analogue Output Type	Voltage/current
Analogue Output Range	0...20 mA +/- 10 V
Analogue Output Resolution	12 bits + sign voltage 12 bits current
Peak Output Current	3 A
Voltage State 0 Guaranteed	<= 5 V
Voltage State 1 Guaranteed	>= 15 V
Input Filtering	<= 100 ms hardware <= 25 ms configurable by software
Response Time	<= 300 µs from state 0 to state 1 for output <= 300 µs from state 1 to state 0 for output
Maximum Leakage Current	5 µA (when switched off) for output
Isolation	No insulation between channels 500 Vrms AC insulation between channel and bus
Maximum Voltage Drop	<0.3 V at 500 mA for output
Current Consumption	69 mA at 5 V DC bus 290 mA at 24 V DC
Max Current	3000 mA loads on I/O power segment
Maximum Power Dissipation In W	7.3 W
Local Signalling	5 LEDs (green) for power supply 5 LEDs (red) for power supply 8 LEDs (yellow) for output status 16 LEDs (green) for input status
Electrical Connection	Removable spring terminal block
Marking	CE
Surge Withstand	0.5 kV differential mode 24 V DC conforming to EN/IEC 61000-4-5 1 kV common mode 24 V DC conforming to EN/IEC 61000-4-5
Electromagnetic Compatibility	EN/IEC 61000-4-6
Disturbance Radiated/Conducted	CISPR 11

Environment

Standards	CSA C22.2 No 213 IEC 61131-2 UL 508 CSA C22.2 No 142
Product Certifications	C-Tick CSA GOST-R cULus
Ambient Air Temperature For Operation	-10…50 °C (vertical installation) -10…60 °C (horizontal installation)
Ambient Air Temperature For Storage	-40…70 °C
Relative Humidity	5…95 % without condensation
Ip Degree Of Protection	IP20 conforming to IEC 61131-2
Pollution Degree	2 conforming to IEC 60664
Operating Altitude	0...2000 m

Storage Altitude	0…3000 m
Vibration Resistance	1 gn at 8.4…150 Hz on DIN rail 3.5 mm at 5…8.4 Hz on DIN rail
Shock Resistance	15 gn for 11 ms
Resistance To Electrostatic Discharge	4 kV on contact conforming to EN/IEC 61000-4-2 8 kV in air conforming to EN/IEC 61000-4-2
Resistance To Electromagnetic Fields	1 V/m 2...2.7 GHz conforming to EN/IEC 61000-4-3 10 V/m 80...2000 MHz conforming to EN/IEC 61000-4-3
Resistance To Fast Transients	1 kV (I/O) conforming to EN/IEC 61000-4-4 1 kV (shielded cable) conforming to EN/IEC 61000-4-4 2 kV (power lines) conforming to EN/IEC 61000-4-4
Mounting Support	DIN rail
Net Weight	0.25 kg

Packing Units

Unit Type Of Package 1	PCE
Number Of Units In Package 1	1
Package 1 Height	7.0 cm
Package 1 Width	9.0 cm
Package 1 Length	11.0 cm
Package 1 Weight	286.0 g
Unit Type Of Package 2	S03
Number Of Units In Package 2	36
Package 2 Height	30.0 cm
Package 2 Width	30.0 cm
Package 2 Length	40.0 cm
Package 2 Weight	10.296 kg

Contractual warranty

Warranty	12 months

Sustainability

Green Premium™ label is Schneider Electric's commitment to delivering products with best-in-class environmental performance. Green Premium promises compliance with the latest regulations, transparency on environmental impacts, as well as circular and low-CO_2 products.

Guide to assessing product sustainability is a white paper that clarifies global eco-label standards and how to interpret environmental declarations.

Learn more about Green Premium >

Guide to assess a product's sustainability >

Transparency RoHS/REACh

Well-being performance

Reach Free Of Svhc	
Toxic Heavy Metal Free	
Mercury Free	
Rohs Exemption Information	Yes
Pvc Free	

Certifications & Standards

Reach Regulation	REACh Declaration
Eu Rohs Directive	Pro-active compliance (Product out of EU RoHS legal scope) EU RoHS Declaration
China Rohs Regulation	China RoHS declaration
Environmental Disclosure	Product Environmental Profile
Weee	The product must be disposed on European Union markets following specific waste collection and never end up in rubbish bins
Circularity Profile	End of Life Information

Presentation

TM5 Compact I/O Module

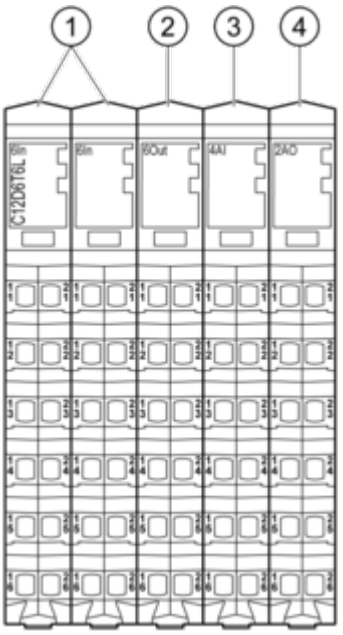

N°	Designation
1	Input electronic module / 6 digital inputs
2	Output electronic module / 6 digital outputs
3	Analog Input electronic module / 4 analog inputs
4	Analog Output electronic module / 2 analog outputs

Dimensions Drawings

Compact I/O Module

Dimensions

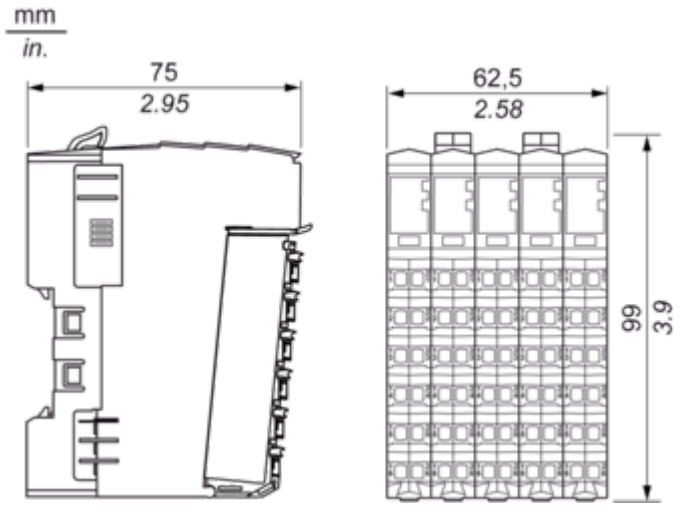

Mounting and Clearance

TM5 System

Spacing Requirements

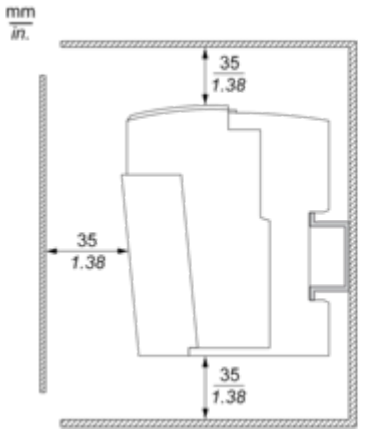

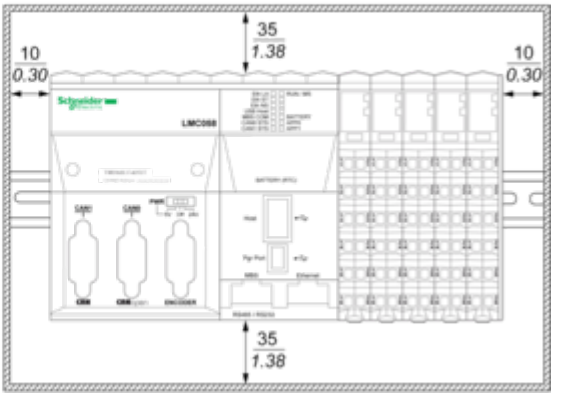

Mounting on a DIN Rail

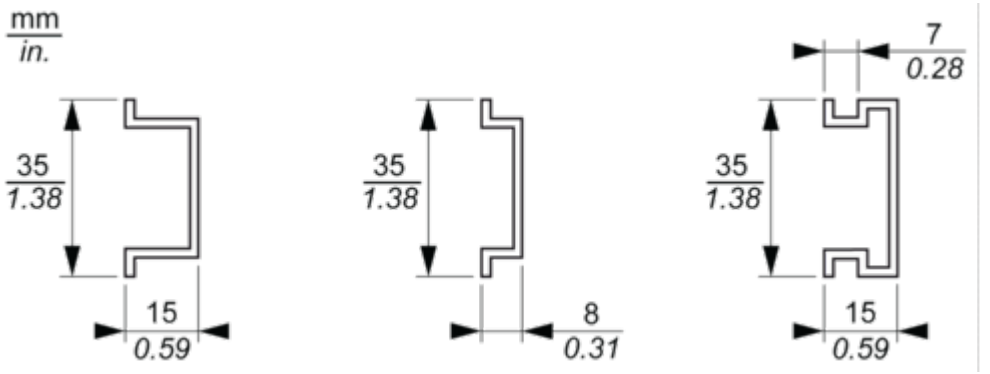

Connections and Schema

TM5 System Wiring Recommendations

Wire Sizes to Use with the Removable Spring Terminal Blocks

mm / in. 9 / 0.35				
mm²	0,08…2,5	0,25…2,5	0,25…1,5	2 x 0,25...2 x 0,75
AWG	28…14	24…14	24…16	2 x 24…2 x 18

Digital Input 6In

Wiring Diagram

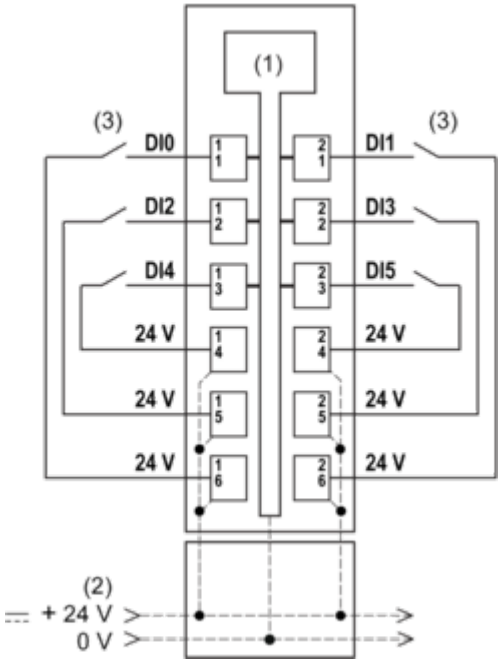

1 Internal electronics
2 24 Vdc I/O power segment integrated into the bus bases
3 2-wire sensor

Digital Output 6Out

Wiring Diagram

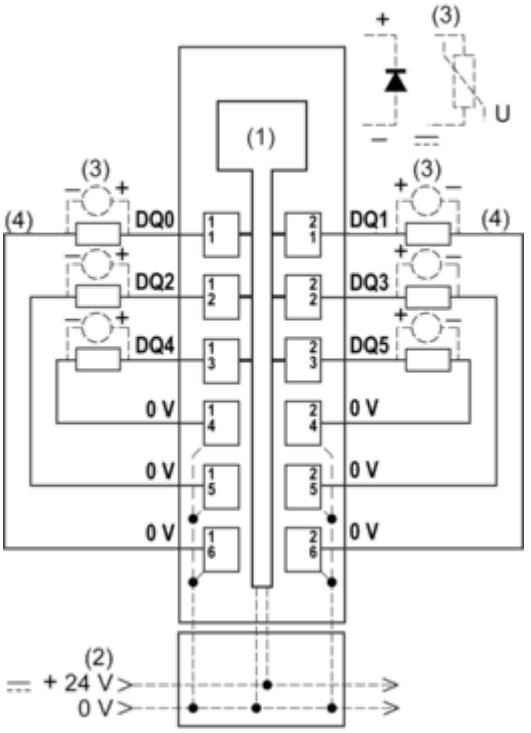

1 Internal electronics
2 24 Vdc I/O power segment integrated into the bus bases
3 Inductive load protection
4 2-wire load

Analog Input 4AI ±10 V / 0-20 mA / 4-20 mA

Wiring Diagram

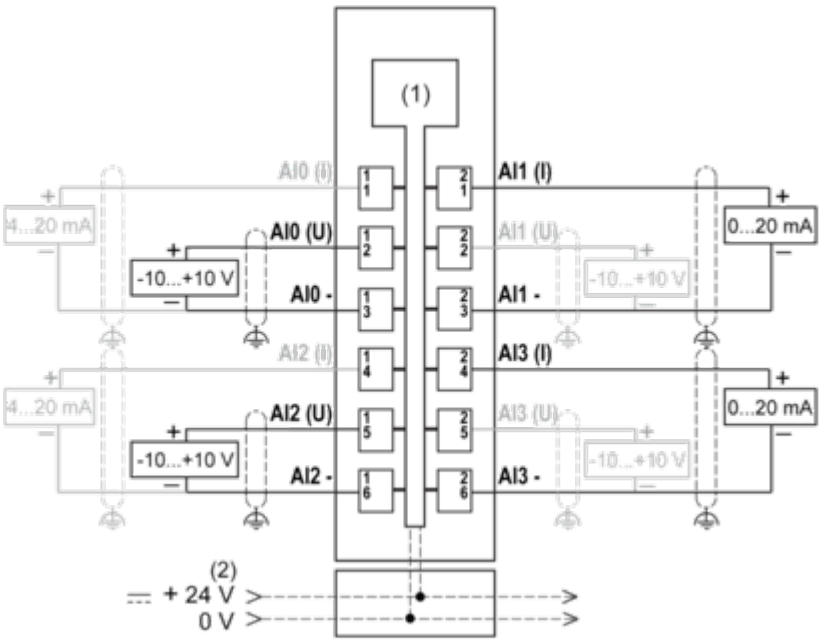

1 Internal electronics
2 24 Vdc I/O power segment integrated into the bus bases
I Current
U Voltage

Analog Output 2AO ±10 V / 0-20 mA

Wiring Diagram

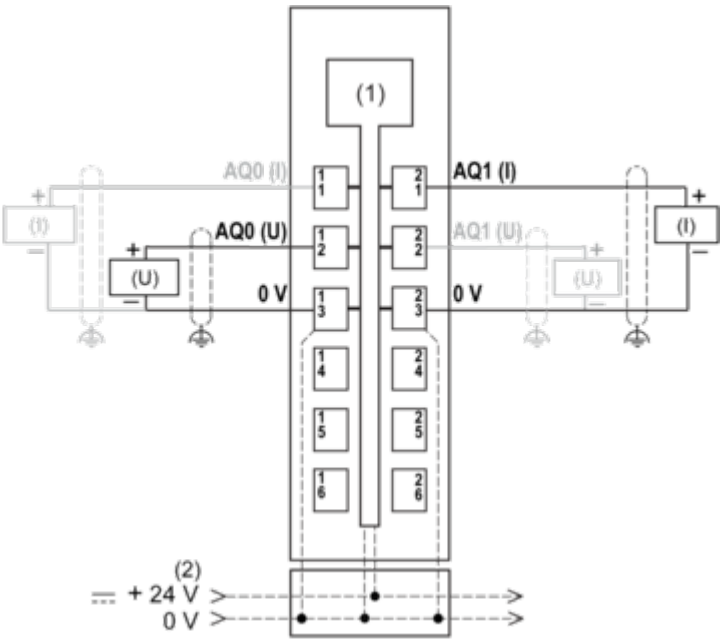

1 Internal electronics
2 24 Vdc I/O power segment integrated into the bus bases
I Current
U Voltage

Performance Curves

Switching Inductive Load Characteristics

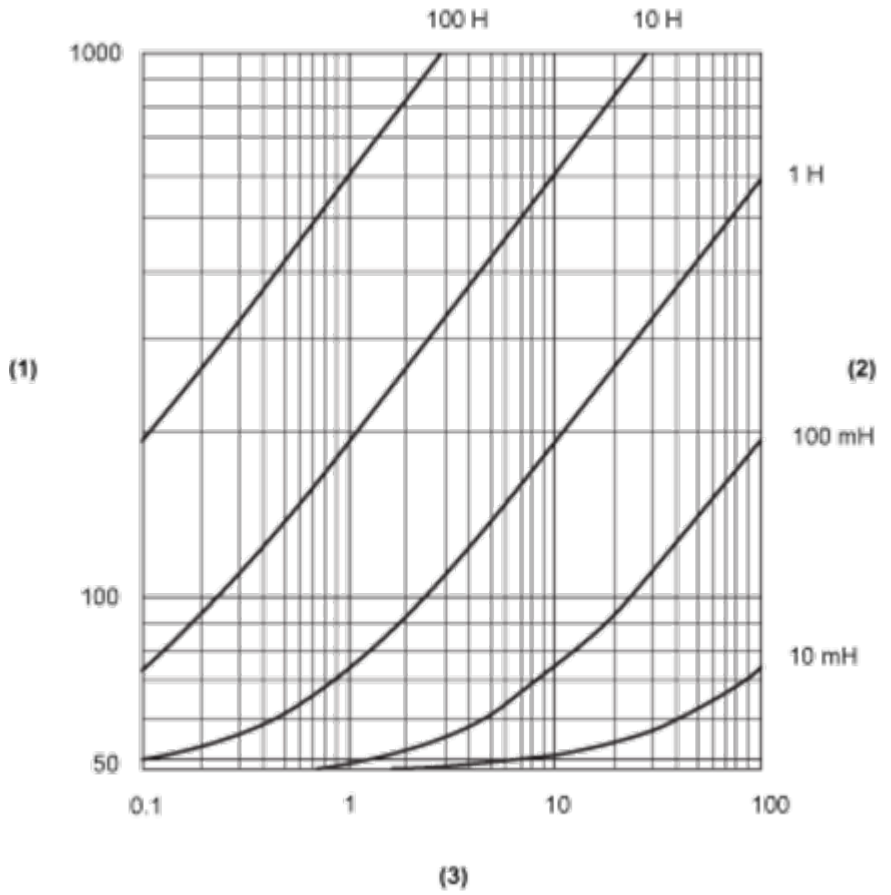

(1) Load resistance in Ω
(2) Load inductance in H
(3) Max. operating cycles / second