# Product datasheet

Specifications

## Power distribution module, Modicon TM5, for I/O 24 V DC & bus

TM5SPS2

## Main

| | |
|---|---|
| **Range Of Product** | Modicon TM5 |
| **Product Or Component Type** | Power distribution module |
| **Product Specific Application** | Supply 24 V DC I/O modules and bus TM5 |

## Complementary

| | |
|---|---|
| **Range Compatibility** | Modicon LMC058<br>Modicon M258 |
| **Product Compatibility** | Motion controller<br>Logic controller |
| **[Us] Rated Supply Voltage** | 24 V |
| **Network Type** | DC |
| **Current Supplied** | 1136 mA for TM5 power bus -10…55 °C<br>740 mA for TM5 power bus 55…60 °C<br>10 A for I/O power segment |
| **Maximum Power Dissipation In W** | 1.91 W |
| **Colour** | Grey |
| **Short-Circuit Protection** | 10 A external fuse |
| **Current Consumption** | <= 25 mA 24 V DC |
| **Marking** | CE |

## Environment

| | |
|---|---|
| **Standards** | UL 508<br>CSA C22.2 No 213<br>CSA C22.2 No 142<br>IEC 61131-2 |
| **Product Certifications** | CSA<br>C-Tick<br>cULus<br>GOST-R |
| **Ambient Air Temperature For Operation** | -10…55 °C without derating (horizontal installation)<br>55…60 °C with derating factor (horizontal installation)<br>-10…50 °C (vertical installation) |
| **Ambient Air Temperature For Storage** | -25…70 °C |
| **Relative Humidity** | 5…95 % without condensation |
| **Operating Altitude** | 0...2000 m |
| **Storage Altitude** | 0…3000 m |
| **Vibration Resistance** | 1 gn at 8.4…150 Hz on DIN rail<br>3.5 mm at 5…8.4 Hz on DIN rail |

Disclaimer: This documentation is not intended as a substitute for and is not to be used for determining suitability or reliability of these products for specific user applications

| | |
|---|---|
| **Shock Resistance** | 15 gn for 11 ms |
| **Resistance To Electrostatic Discharge** | 4 kV on contact conforming to EN/IEC 61000-4-2<br>8 kV in air conforming to EN/IEC 61000-4-2 |
| **Resistance To Electromagnetic Fields** | 1 V/m 2...2.7 GHz conforming to EN/IEC 61000-4-3<br>10 V/m 80...2000 MHz conforming to EN/IEC 61000-4-3 |
| **Resistance To Fast Transients** | 1 kV (I/O) conforming to EN/IEC 61000-4-4<br>1 kV (shielded cable) conforming to EN/IEC 61000-4-4<br>2 kV (power lines) conforming to EN/IEC 61000-4-4 |
| **Surge Withstand** | 0.5 kV differential mode conforming to EN/IEC 61000-4-5<br>1 kV common mode conforming to EN/IEC 61000-4-5 |
| **Electromagnetic Compatibility** | EN/IEC 61000-4-6 |
| **Disturbance Radiated/Conducted** | CISPR 11 |

## Packing Units

| | |
|---|---|
| **Unit Type Of Package 1** | PCE |
| **Number Of Units In Package 1** | 1 |
| **Package 1 Height** | 2.000 cm |
| **Package 1 Width** | 6.000 cm |
| **Package 1 Length** | 10.500 cm |
| **Package 1 Weight** | 50.000 g |
| **Unit Type Of Package 2** | S02 |
| **Number Of Units In Package 2** | 97 |
| **Package 2 Height** | 15.000 cm |
| **Package 2 Width** | 30.000 cm |
| **Package 2 Length** | 40.000 cm |
| **Package 2 Weight** | 5.286 kg |

## Contractual warranty

| | |
|---|---|
| **Warranty** | 12 months |

## Sustainability

**Green Premium™ label** is Schneider Electric's commitment to delivering products with best-in-class environmental performance. Green Premium promises compliance with the latest regulations, transparency on environmental impacts, as well as circular and low-$CO_2$ products.

**Guide to assessing product sustainability** is a white paper that clarifies global eco-label standards and how to interpret environmental declarations.

Learn more about Green Premium >

Guide to assess a product's sustainability >

Transparency RoHS/REACh

## Well-being performance

| | |
|---|---|
| Reach Free Of Svhc | |
| Toxic Heavy Metal Free | |
| Mercury Free | |
| Rohs Exemption Information | Yes |
| Pvc Free | |

## Certifications & Standards

| | |
|---|---|
| **Reach Regulation** | REACh Declaration |
| **Eu Rohs Directive** | Pro-active compliance (Product out of EU RoHS legal scope)<br>EU RoHS Declaration |
| **China Rohs Regulation** | China RoHS declaration |
| **Environmental Disclosure** | Product Environmental Profile |
| **Weee** | The product must be disposed on European Union markets following specific waste collection and never end up in rubbish bins |
| **Circularity Profile** | End of Life Information |

Dimensions Drawings

## TM5 Slice

### Dimensions

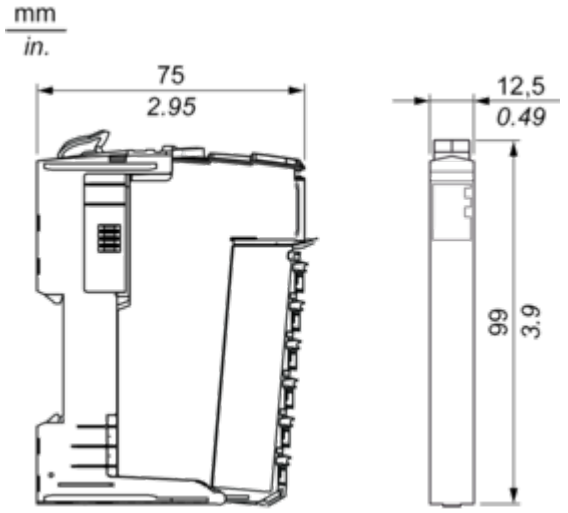

Mounting and Clearance

## TM5 System

### Spacing Requirements

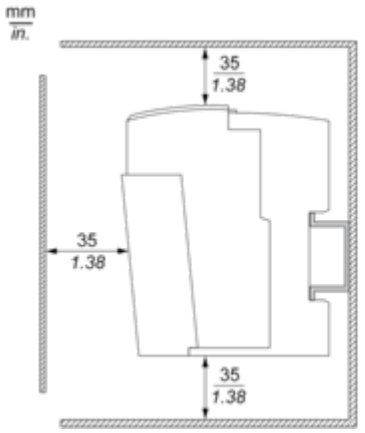


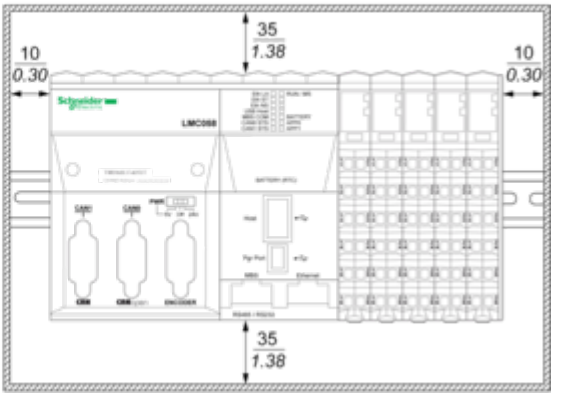


### Mounting on a DIN Rail

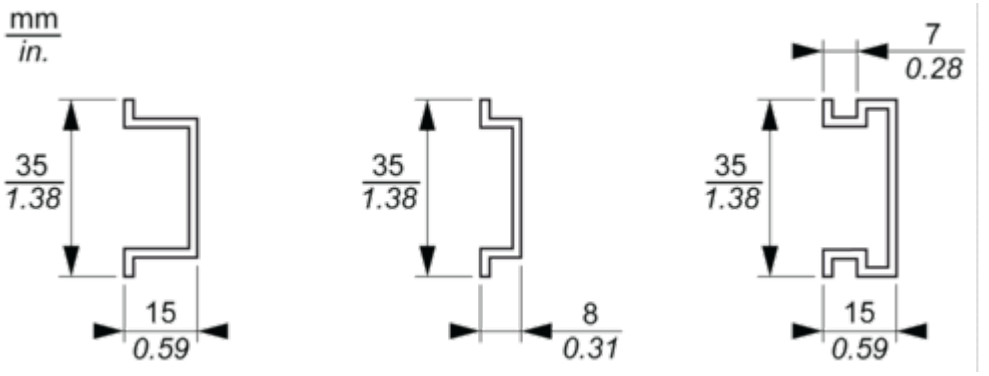

Connections and Schema

## TM5 System Wiring Recommendations

### Wire Sizes to Use with the Removable Spring Terminal Blocks

| mm / in. 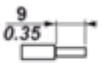 |  | | | |
|---|---|---|---|---|
| mm² | 0,08…2,5 | 0,25…2,5 | 0,25…1,5 | 2 x 0,25...2 x 0,75 |
| AWG | 28…14 | 24…14 | 24…16 | 2 x 24…2 x 18 |

## PDM Electronic Module 24 Vdc I/O and TM5 Power Bus

### Wiring Diagram

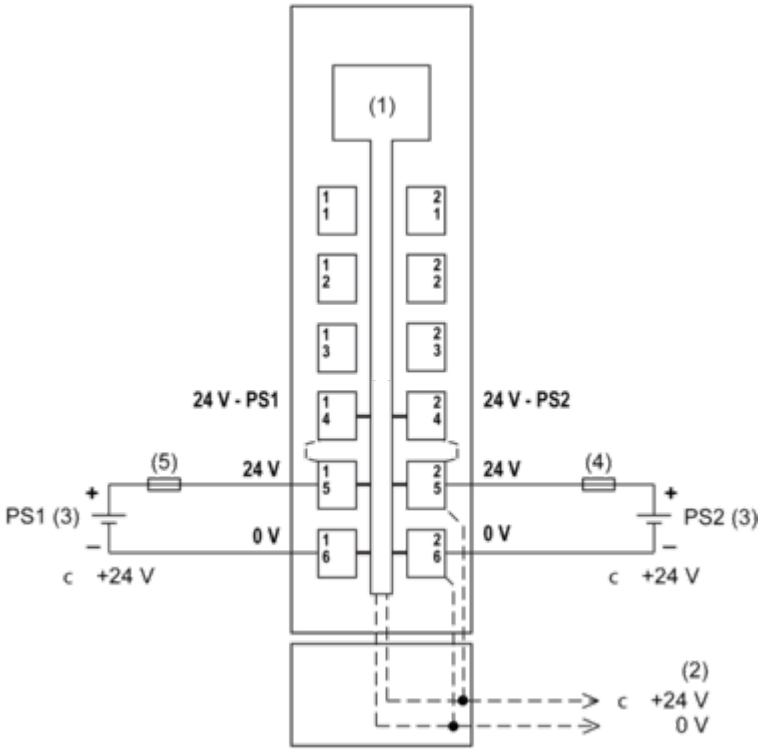


**(1)** Internal electronics
**(2)** 24 Vdc I/O power segment integrated into the bus bases
**(3)** PS1/PS2: External isolated SELV power supplies 24 Vdc limited to 200 VA for UL508 conformance, or limited to 150 VA for CSA 22.2, N° 142 conformance
**(4)** External fuse type T slow-blow 10 A max. 250 V
**(5)** External fuse type T slow-blow 1 A 250 V