# Product datasheet

Specifications

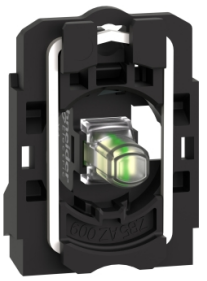

## white light block with body/fixing collar integral LED 24V

ZB5AVB1

## Main

| | |
|---|---|
| **Range Of Product** | Harmony XB5 |
| **Product Or Component Type** | Complete body/light block assembly |
| **Device Short Name** | ZB5 |
| **Fixing Collar Material** | Plastic |
| **Sale Per Indivisible Quantity** | 1 |
| **Connections - Terminals** | Screw clamp terminals, <= 2 x 1.5 mm² with cable end conforming to IEC 60947-1<br>Screw clamp terminals, >= 1 x 0.22 mm² without cable end conforming to IEC 60947-1 |
| **Light Source** | Universal LED |
| **Bulb Base** | Integral LED |
| **Light Source Colour** | White |

## Complementary

| | |
|---|---|
| **Cad Overall Width** | 30 mm |
| **Cad Overall Height** | 42 mm |
| **Cad Overall Depth** | 32 mm |
| **Terminals Description Iso N°1** | (X1-X2)PL |
| **Net Weight** | 0.022 kg |
| **Tightening Torque** | 0.8…1.2 N.m conforming to IEC 60947-1 |
| **Shape Of Screw Head** | Cross compatible with Philips no 1 screwdriver<br>Cross compatible with pozidriv No 1 screwdriver<br>Slotted compatible with flat Ø 4 mm screwdriver<br>Slotted compatible with flat Ø 5.5 mm screwdriver |
| **[Ui] Rated Insulation Voltage** | 600 V (pollution degree 3) conforming to IEC 60947-1 |
| **[Uimp] Rated Impulse Withstand Voltage** | 6 kV conforming to IEC 60947-1 |
| **Signalling Type** | Steady |
| **[Us] Rated Supply Voltage** | 24 V AC/DC at 50/60 Hz |
| **Supply Voltage Limits** | 19.2…30 V DC<br>21.6…26.4 V AC |
| **Current Consumption** | 18 mA |
| **Service Life** | 100000 h at rated voltage and 25 °C |
| **Surge Withstand** | 1 kV conforming to IEC 61000-4-5 |
| **Device Presentation** | Basic sub-assemblies |

Disclaimer: This documentation is not intended as a substitute for and is not to be used for determining suitability or reliability of these products for specific user applications

## Environment

| | |
|---|---|
| **Protective Treatment** | TH |
| **Ambient Air Temperature For Storage** | -40…70 °C |
| **Ambient Air Temperature For Operation** | -40…70 °C |
| **Electrical Shock Protection Class** | Class II conforming to IEC 60536 |
| **Standards** | JIS C8201-5-1<br>IEC 60947-5-4<br>IEC 60947-5-1<br>UL 508<br>IEC 60947-1<br>CSA C22.2 No 14<br>JIS C8201-1 |
| **Product Certifications** | LROS (Lloyds register of shipping)<br>GL<br>BV<br>CSA<br>DNV<br>UL listed |
| **Vibration Resistance** | 5 gn (f= 2…500 Hz) conforming to IEC 60068-2-6 |
| **Shock Resistance** | 30 gn (duration = 18 ms) for half sine wave acceleration conforming to IEC 60068-2-27<br>50 gn (duration = 11 ms) for half sine wave acceleration conforming to IEC 60068-2-27 |
| **Resistance To Fast Transients** | 2 kV conforming to IEC 61000-4-4 |
| **Resistance To Electromagnetic Fields** | 10 V/m conforming to IEC 61000-4-3 |
| **Resistance To Electrostatic Discharge** | 6 kV on contact (on metal parts) conforming to IEC 61000-2-6<br>8 kV in free air (in insulating parts) conforming to IEC 61000-2-6 |
| **Electromagnetic Emission** | Class B conforming to IEC 55011 |

## Packing Units

| | |
|---|---|
| **Unit Type Of Package 1** | PCE |
| **Number Of Units In Package 1** | 1 |
| **Package 1 Height** | 5.600 cm |
| **Package 1 Width** | 3.400 cm |
| **Package 1 Length** | 5.400 cm |
| **Package 1 Weight** | 20.000 g |
| **Unit Type Of Package 2** | BB1 |
| **Number Of Units In Package 2** | 5 |
| **Package 2 Height** | 5.600 cm |
| **Package 2 Width** | 3.400 cm |
| **Package 2 Length** | 26.500 cm |
| **Package 2 Weight** | 100.000 g |
| **Unit Type Of Package 3** | S03 |
| **Number Of Units In Package 3** | 200 |
| **Package 3 Height** | 30.000 cm |
| **Package 3 Width** | 30.000 cm |
| **Package 3 Length** | 40.000 cm |
| **Package 3 Weight** | 4.489 kg |

## Contractual warranty

| | |
|---|---|
| **Warranty** | 12 months |

## Sustainability

**Green Premium™ label** is Schneider Electric's commitment to delivering products with best-in-class environmental performance. Green Premium promises compliance with the latest regulations, transparency on environmental impacts, as well as circular and low-$CO_2$ products.

**Guide to assessing product sustainability** is a white paper that clarifies global eco-label standards and how to interpret environmental declarations.

Learn more about Green Premium >

Guide to assess a product's sustainability >

Transparency RoHS/REACh

## Well-being performance

Mercury Free

| | |
|---|---|
| Rohs Exemption Information | Yes |

## Certifications & Standards

| | |
|---|---|
| **Reach Regulation** | REACh Declaration |
| **Eu Rohs Directive** | Pro-active compliance (Product out of EU RoHS legal scope) |
| **China Rohs Regulation** | China RoHS declaration |
| **Environmental Disclosure** | Product Environmental Profile |
| **Weee** | The product must be disposed on European Union markets following specific waste collection and never end up in rubbish bins |
| **Circularity Profile** | End of Life Information |

Dimensions Drawings

## Dimensions

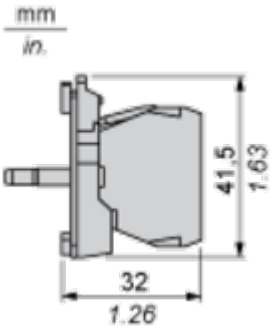

## Mounting and Clearance

### Panel Cut-out for Pushbuttons, Switches and Pilot Lights (Finished Holes, Ready for Installation)

### Connection by Screw Clamp Terminals or Plug-in Connectors or on Printed Circuit Board

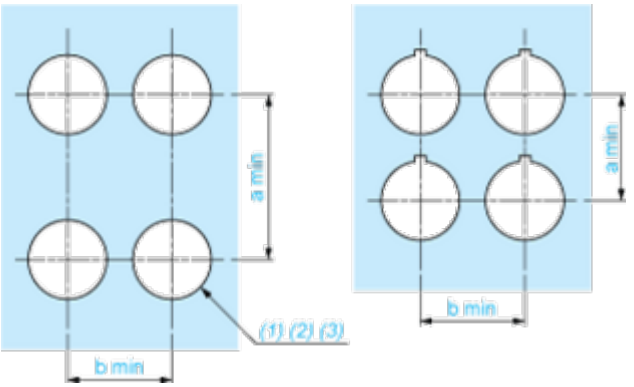


**(1)** Diameter on finished panel or support
**(2)** For selector switches and Emergency stop buttons, use of an anti-rotation plate type ZB5AZ902 is recommended.
**(3)** Ø22.5 mm recommended (Ø22.3 $_{0}^{+0.4}$) / Ø0.89 in. recommended (Ø0.88 in. $_{0}^{+0.016}$)

| Connections | a in mm | a in in. | b in mm | b in in. |
|---|---|---|---|---|
| By screw clamp terminals or plug-in connector | 40 | 1.57 | 30 | 1.18 |
| By Faston connectors | 45 | 1.77 | 32 | 1.26 |
| On printed circuit board | 30 | 1.18 | 30 | 1.18 |

### Detail of Lug Recess

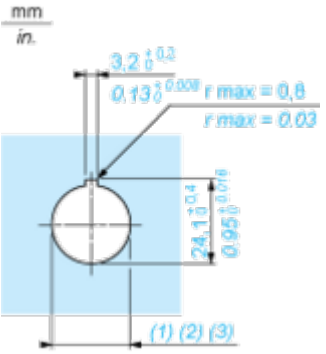


**(1)** Diameter on finished panel or support
**(2)** For selector switches and Emergency stop buttons, use of an anti-rotation plate type ZB5AZ902 is recommended.
**(3)** Ø22.5 mm recommended (Ø22.3 $_{0}^{+0.4}$) / Ø0.89 in. recommended (Ø0.88 in. $_{0}^{+0.016}$)