Product datasheet

Specifications

Green Premium™

servo motor BCH, Lexium 28, 100mm, 1000W, 2.45kg.cm², with oil seal, with key, brake, straight connection

BCH2LH1033CF6C

Main

Range Compatibility	Lexium 28
Product Or Component Type	Servo motor
Device Short Name	BCH2

Complementary

Maximum Mechanical Speed	5000 rpm
[Us] Rated Supply Voltage	220 V
Network Number Of Phases	Single phase Three phase
Continuous Stall Current	5.83 A
Continuous Stall Torque	3.18 N.m for LXM26D at 7 A, 220 V, single phase 3.18 N.m for LXM26D at 7 A, 220 V, three phase 3.18 N.m for LXM28... at 7 A, 220 V, single phase 3.18 N.m for LXM28... at 7 A, 220 V, three phase
Continuous Power	1000 W
Peak Stall Torque	9.54 N.m for LXM26D at 7 A, 220 V, single phase 9.54 N.m for LXM26D at 7 A, 220 V, three phase 9.54 N.m for LXM28... at 7 A, 220 V, single phase 9.54 N.m for LXM28... at 7 A, 220 V, three phase
Nominal Output Power	1000 W for LXM26D at 7 A, 220 V, single phase 1000 W for LXM26D at 7 A, 220 V, three phase 1000 W for LXM28... at 7 A, 220 V, single phase 1000 W for LXM28... at 7 A, 220 V, three phase
Nominal Torque	3.18 N.m for LXM26D at 7 A, 220 V, single phase 3.18 N.m for LXM26D at 7 A, 220 V, three phase 3.18 N.m for LXM28... at 7 A, 220 V, single phase 3.18 N.m for LXM28... at 7 A, 220 V, three phase
Nominal Speed	3000 rpm for LXM26D at 7 A, 220 V, single phase 3000 rpm for LXM26D at 7 A, 220 V, three phase 3000 rpm for LXM28... at 7 A, 220 V, single phase 3000 rpm for LXM28... at 7 A, 220 V, three phase
Maximum Current Irms	18.9 A for LXM28... at 1 kW, 220 V
Maximum Permanent Current	6.64 A
Product Compatibility	LXM26D servo drive motor at 1 kW, 220 V, single phase LXM26D servo drive motor at 1 kW, 220 V, three phase LXM28... servo drive motor at 1 kW, 220 V, single phase LXM28... servo drive motor at 1 kW, 220 V, three phase
Shaft End	Keyed
Shaft Diameter	22 mm
Shaft Length	45 mm
Key Width	8 mm

Disclaimer: This documentation is not intended as a substitute for and is not to be used for determining suitability or reliability of these products for specific user applications

Feedback Type	20 bits single turn absolute encoder
Holding Brake	With
Holding Torque	6.5 N.m built-in
Mounting Support	Asian standard flange
Motor Flange Size	100 mm
Electrical Connection	Connector MIL
Torque Constant	0.55 N.m/A at 20 °C
Back Emf Constant	33 V/krpm at 20 °C
Rotor Inertia	2.45 kg.cm²
Stator Resistance	0.67 Ohm at 20 °C
Stator Inductance	4.2 mH at 20 °C
Stator Electrical Time Constant	6.27 ms at 20 °C
Maximum Radial Force Fr	570 N at 3000 rpm
Maximum Axial Force Fa	200 N
Brake Pull-In Power	10.4 W
Type Of Cooling	Natural convection
Length	180.5 mm
Number Of Motor Stacks	1
Centring Collar Diameter	95 mm
Centring Collar Depth	7 mm
Number Of Mounting Holes	4
Mounting Holes Diameter	9.2 mm
Circle Diameter Of The Mounting Holes	115 mm
Distance Shaft Shoulder-Flange	7 mm
Net Weight	5.1 kg

Environment

Ip Degree Of Protection	IP50 IM V3 IP65 IM B5, IM V1
Ambient Air Temperature For Operation	0…40 °C

Packing Units

Unit Type Of Package 1	PCE
Number Of Units In Package 1	1
Package 1 Height	18.0 cm
Package 1 Width	36.0 cm
Package 1 Length	27.5 cm
Package 1 Weight	7.23 kg

Sustainability

Green Premium™ label is Schneider Electric's commitment to delivering products with best-in-class environmental performance. Green Premium promises compliance with the latest regulations, transparency on environmental impacts, as well as circular and low-CO_2 products.

Guide to assessing product sustainability is a white paper that clarifies global eco-label standards and how to interpret environmental declarations.

Learn more about Green Premium >

Guide to assess a product's sustainability >

Transparency RoHS/REACh

Well-being performance

Reach Free Of Svhc	
Mercury Free	
Rohs Exemption Information	Yes
Pvc Free	

Certifications & Standards

Reach Regulation	REACh Declaration
Eu Rohs Directive	Pro-active compliance (Product out of EU RoHS legal scope)
China Rohs Regulation	China RoHS declaration
Environmental Disclosure	Product Environmental Profile
Weee	The product must be disposed on European Union markets following specific waste collection and never end up in rubbish bins
Circularity Profile	End of Life Information

Dimensions Drawings

Dimensions

Dimensions of Motor

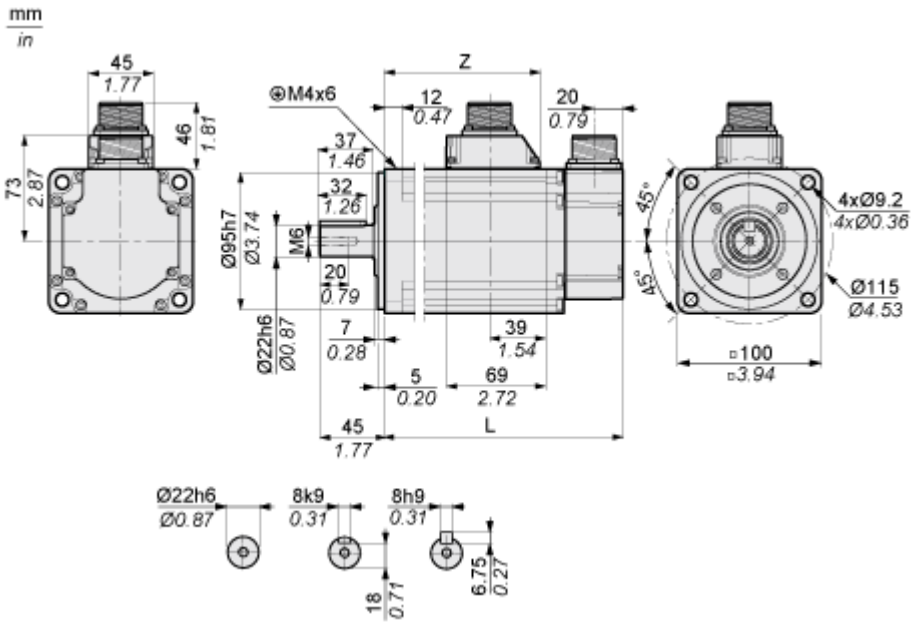

	mm	in.
L (without holding brake)	153.5	6.04
L (with holding brake)	180.5	7.11
Z	96	3.78

Performance Curves

Torque/Speed Curves with 230 V Single/Three Phase Supply Voltage

Servo Motor with LXM28AU10••• Servo Drive

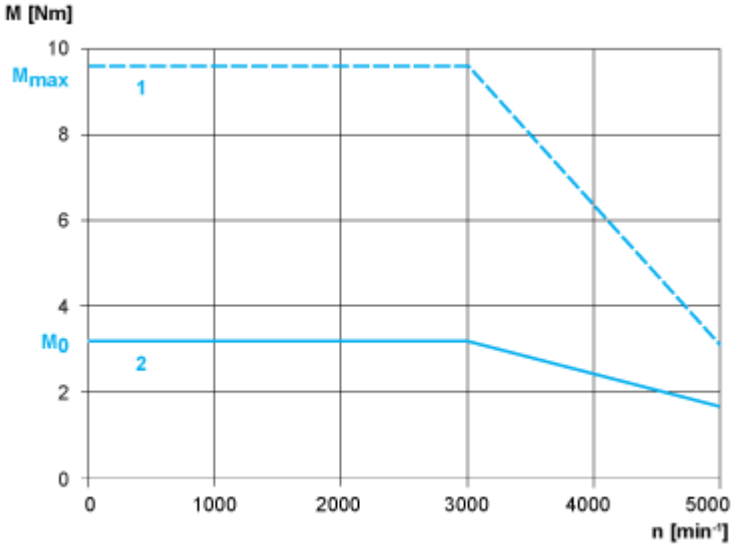

1 : Peak torque

2 : Continuous torque