Product datasheet

Specifications

servo motor BMH, Lexium 32, 1.4Nm, 8000rpm, keyed shaft, without brake, IP54, 16bit encoder

BMH0701T16A2A

Main

Product Or Component Type	Servo motor
Device Short Name	BMH
Maximum Mechanical Speed	8000 rpm
Continuous Stall Torque	1.4 N.m for LXM32.U90M2 at 3 A, 230 V, single phase 1.4 N.m for LXM32.D18M2 at 6 A, 115 V, single phase
Peak Stall Torque	4 N.m for LXM32.U90M2 at 3 A, 230 V, single phase 4.2 N.m for LXM32.D18M2 at 6 A, 115 V, single phase
Nominal Output Power	450 W for LXM32.U90M2 at 3 A, 230 V, single phase 350 W for LXM32.D18M2 at 6 A, 115 V, single phase
Nominal Torque	1.1 N.m for LXM32.U90M2 at 3 A, 230 V, single phase 1.35 N.m for LXM32.D18M2 at 6 A, 115 V, single phase
Nominal Speed	4000 rpm for LXM32.U90M2 at 3 A, 230 V, single phase 2500 rpm for LXM32.D18M2 at 6 A, 115 V, single phase
Product Compatibility	LXM32.D18M2 at 115 V single phase LXM32.U90M2 at 230 V single phase
Shaft End	Keyed
Ip Degree Of Protection	IP54 standard
Speed Feedback Resolution	32768 points/turn
Holding Brake	Without
Mounting Support	International standard flange
Electrical Connection	Rotatable right-angled connectors

Complementary

Range Compatibility	Lexium 32
[Us] Rated Supply Voltage	240 V
Network Number Of Phases	Three phase
Continuous Stall Current	2.85 A
Continuous Power	1.05 W
Maximum Current Irms	9.6 A for LXM32.D18M2 9.6 A for LXM32.U90M2
Maximum Permanent Current	9.56 A
Second Shaft	Without second shaft end
Shaft Diameter	11 mm
Shaft Length	23 mm
Key Width	18 mm

Disclaimer: This documentation is not intended as a substitute for and is not to be used for determining suitability or reliability of these products for specific user applications

Feedback Type	Single turn SinCos Hiperface
Motor Flange Size	70 mm
Number Of Motor Stacks	1
Torque Constant	0.49 N.m/A at 120 °C
Back Emf Constant	31.17 V/krpm at 120 °C
Number Of Motor Poles	10
Rotor Inertia	0.59 kg.cm²
Stator Resistance	3.2 Ohm at 20 °C
Stator Inductance	9.1 mH at 20 °C
Stator Electrical Time Constant	2.8 ms at 20 °C
Maximum Radial Force Fr	660 N at 1000 rpm 520 N at 2000 rpm 460 N at 3000 rpm 410 N at 4000 rpm 380 N at 5000 rpm 360 N at 6000 rpm
Maximum Axial Force Fa	0.2 x Fr
Type Of Cooling	Natural convection
Length	122 mm
Centring Collar Diameter	60 mm
Centring Collar Depth	2.5 mm
Number Of Mounting Holes	4
Mounting Holes Diameter	5.5 mm
Circle Diameter Of The Mounting Holes	82 mm
Net Weight	1.6 kg

Packing Units

Unit Type Of Package 1	PCE
Number Of Units In Package 1	1
Package 1 Height	11.0 cm
Package 1 Width	19.0 cm
Package 1 Length	39.5 cm
Package 1 Weight	2.194 kg
Unit Type Of Package 2	S04
Number Of Units In Package 2	4
Package 2 Height	30.0 cm
Package 2 Width	40.0 cm
Package 2 Length	60.0 cm
Package 2 Weight	10.028 kg

Contractual warranty

Warranty	18 months

Sustainability

Green Premium™ label is Schneider Electric's commitment to delivering products with best-in-class environmental performance. Green Premium promises compliance with the latest regulations, transparency on environmental impacts, as well as circular and low-CO_2 products.

Guide to assessing product sustainability is a white paper that clarifies global eco-label standards and how to interpret environmental declarations.

Learn more about Green Premium >

Guide to assess a product's sustainability >

Transparency RoHS/REACh

Well-being performance

Mercury Free	
Rohs Exemption Information	Yes
Pvc Free	

Certifications & Standards

Reach Regulation	REACh Declaration
Eu Rohs Directive	Pro-active compliance (Product out of EU RoHS legal scope)
China Rohs Regulation	China RoHS declaration
Environmental Disclosure	Product Environmental Profile
Weee	The product must be disposed on European Union markets following specific waste collection and never end up in rubbish bins
Circularity Profile	No need of specific recycling operations

Dimensions Drawings

Servo Motors Dimensions

Example with Straight Connectors

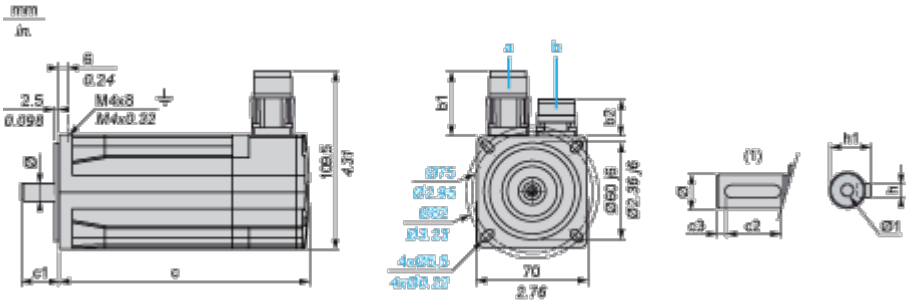

a: Power supply for servo motor brake

b: Power supply for servo motor encoder

(1) Shaft end, keyed slot (optional)

Dimensions in mm

Straight connectors		Rotatable angled connectors		c (without brake)	c (with brake)	c1	c2	c3	h	h1	Ø	Ø1 for screws
b1	b2	b1	b2									
39.5	25.5	39.5	39.5	122	161	23	18	2.5	4 h9	$12.5^{+0}_{-0.13}$	11 k6	M4 x 14

Dimensions in in.

Straight connectors		Rotatable angled connectors		c (without brake)	c (with brake)	c1	c2	c3	h	h1	Ø	Ø1 for screws
b1	b2	b1	b2									
1.55	1	1.55	1.55	4.80	6.33	0.90	0.70	0.09	0.16 h9	$0.49^{+0}_{-0.0051}$	0.43 k6	M4 x 0.55

Performance Curves

115 V Single-Phase Supply Voltage

Torque/Speed Curves

Servo motor with LXM32•D18M2 servo drive

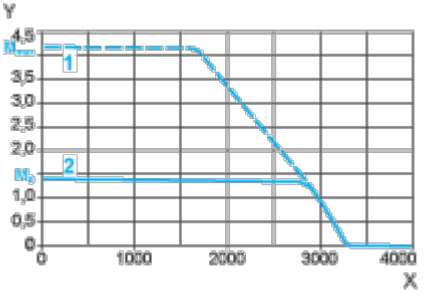

X Speed in rpm

Y Torque in Nm

1 Peak torque

2 Continuous torque

230 V Single-Phase Supply Voltage

Torque/Speed Curves

Servo motor with LXM32•U90M2 servo drive

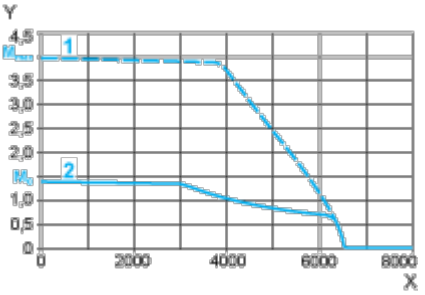

X Speed in rpm

Y Torque in Nm

1 Peak torque

2 Continuous torque