Product datasheet

Specifications

servo motor BMH, Lexium 32, 8.4Nm, 6000rpm, untapped shaft, with brake, IP54, 16bit encoder

BMH1003P06F2A

Main

Product Or Component Type	Servo motor
Device Short Name	BMH
Maximum Mechanical Speed	6000 rpm
Continuous Stall Torque	8.4 N.m for LXM32.D30N4 at 10 A, 400 V, three phase 8.4 N.m for LXM32.D30N4 at 10 A, 480 V, three phase
Peak Stall Torque	25.1 N.m for LXM32.D30N4 at 10 A, 400 V, three phase 25.1 N.m for LXM32.D30N4 at 10 A, 480 V, three phase
Nominal Output Power	2700 W for LXM32.D30N4 at 10 A, 400 V, three phase 2700 W for LXM32.D30N4 at 10 A, 480 V, three phase
Nominal Torque	6.2 N.m for LXM32.D30N4 at 10 A, 400 V, three phase 6.2 N.m for LXM32.D30N4 at 10 A, 480 V, three phase
Nominal Speed	4000 rpm for LXM32.D30N4 at 10 A, 400 V, three phase 4000 rpm for LXM32.D30N4 at 10 A, 480 V, three phase
Product Compatibility	LXM32.D30N4 at 400...480 V three phase
Shaft End	Smooth shaft
Ip Degree Of Protection	IP54 standard
Speed Feedback Resolution	32768 points/turn
Holding Brake	With
Mounting Support	International standard flange
Electrical Connection	Rotatable right-angled connectors

Complementary

Range Compatibility	Lexium 32
[Us] Rated Supply Voltage	480 V
Network Number Of Phases	Three phase
Continuous Stall Current	7.69 A
Continuous Power	3.3 W
Maximum Current Irms	29.1 A for LXM32.D30N4
Maximum Permanent Current	29.1 A
Second Shaft	Without second shaft end
Shaft Diameter	19 mm
Shaft Length	40 mm
Feedback Type	Single turn SinCos Hiperface
Holding Torque	9 N.m holding brake

Disclaimer: This documentation is not intended as a substitute for and is not to be used for determining suitability or reliability of these products for specific user applications

Motor Flange Size	100 mm
Number Of Motor Stacks	3
Torque Constant	1 N.m/A at 120 °C
Back Emf Constant	63.5 V/krpm at 120 °C
Number Of Motor Poles	10
Rotor Inertia	10.3 kg.cm²
Stator Resistance	0.63 Ohm at 20 °C
Stator Inductance	4 mH at 20 °C
Stator Electrical Time Constant	6.3 ms at 20 °C
Maximum Radial Force Fr	1050 N at 1000 rpm 830 N at 2000 rpm 730 N at 3000 rpm 660 N at 4000 rpm 610 N at 5000 rpm
Maximum Axial Force Fa	0.2 x Fr
Brake Pull-In Power	18 W
Type Of Cooling	Natural convection
Length	234.3 mm
Centring Collar Diameter	95 mm
Centring Collar Depth	3.5 mm
Number Of Mounting Holes	4
Mounting Holes Diameter	9 mm
Circle Diameter Of The Mounting Holes	115 mm
Net Weight	8.15 kg

Packing Units

Unit Type Of Package 1	PCE
Number Of Units In Package 1	1
Package 1 Height	19.5 cm
Package 1 Width	22.0 cm
Package 1 Length	40.0 cm
Package 1 Weight	8.6 kg
Unit Type Of Package 2	P06
Number Of Units In Package 2	12
Package 2 Height	77.0 cm
Package 2 Width	80.0 cm
Package 2 Length	60.0 cm
Package 2 Weight	111.7 kg

Contractual warranty

Warranty	18 months

Sustainability

Green Premium™ label is Schneider Electric's commitment to delivering products with best-in-class environmental performance. Green Premium promises compliance with the latest regulations, transparency on environmental impacts, as well as circular and low-CO_2 products.

Guide to assessing product sustainability is a white paper that clarifies global eco-label standards and how to interpret environmental declarations.

Learn more about Green Premium >

Guide to assess a product's sustainability >

Transparency RoHS/REACh

Well-being performance

Mercury Free	
Rohs Exemption Information	Yes
Pvc Free	

Certifications & Standards

Reach Regulation	REACh Declaration
Eu Rohs Directive	Pro-active compliance (Product out of EU RoHS legal scope)
China Rohs Regulation	China RoHS declaration
Environmental Disclosure	Product Environmental Profile
Weee	The product must be disposed on European Union markets following specific waste collection and never end up in rubbish bins
Circularity Profile	No need of specific recycling operations

Dimensions Drawings

Servo Motors Dimensions

Example with Straight Connectors

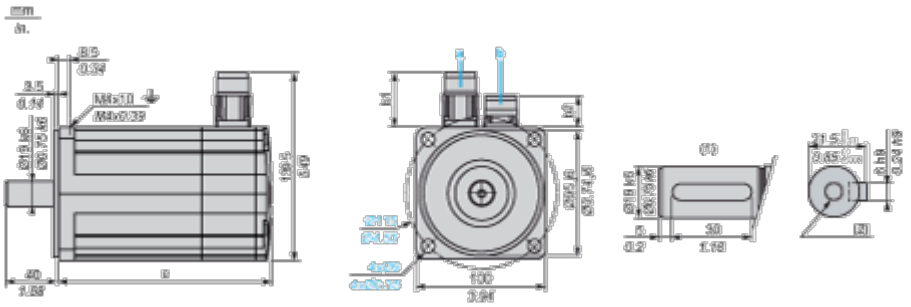

a: Power supply for servo motor brake

b: Power supply for servo motor encoder

(1) Shaft end, keyed slot (optional)

(2) For screw M6 x 21 mm/M6 x 0.83 in.

Dimensions in mm

Straight connectors		Rotatable angled connectors		c (without brake)	c (with brake)
b1	b2	b1	b2		
39.5	25.5	39.5	39.5	192	234

Dimensions in in.

Straight connectors		Rotatable angled connectors		c (without brake)	c (with brake)
b1	b2	b1	b2		
1.55	1.00	1.55	1.55	7.55	9.21

Performance Curves

400 V 3-Phase Supply Voltage

Torque/Speed Curves

Servo motor with LXM32•D30N4 servo drive

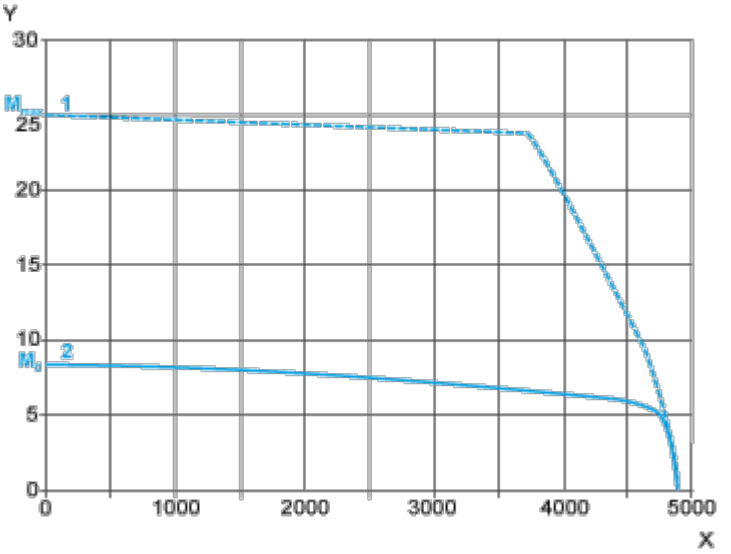

X Speed in rpm

Y Torque in Nm

1 Peak torque

2 Continuous torque

480 V 3-Phase Supply Voltage

Torque/Speed Curves

Servo motor with LXM32•D30N4 servo drive

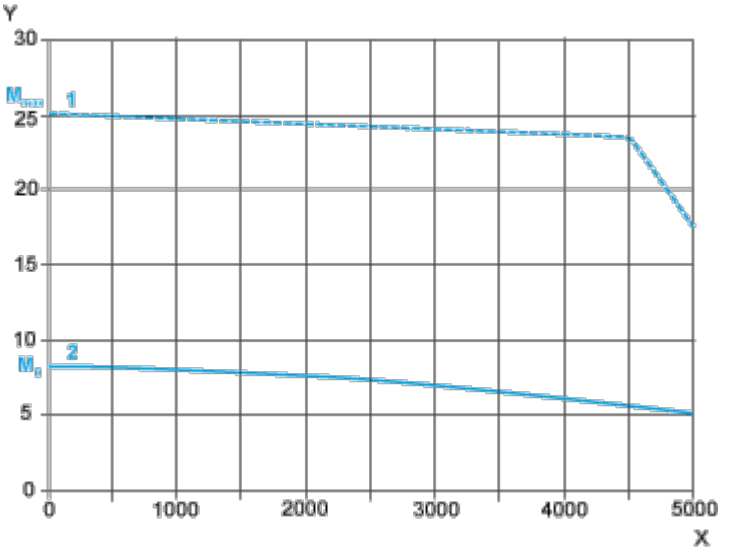

X Speed in rpm

Y Torque in Nm

1 Peak torque

2 Continuous torque