Product datasheet

Specifications

Green Premium™

gearbox with straight teeth GBX- Ø 160 mm- reduction 12:1- < 10arcmin- 800 N.m

GBX1600121404F

Discontinued on: 01-Nov-2020

Discontinued

Main

Range Compatibility	Lexium 62 Lexium 62 ILM Lexium 32 Lexium 15 Lexium 52
Product Or Component Type	Planetary gearbox
Gear Box Type	Straight teeth
Device Short Name	GBX
Gearbox External Diameter	160 mm
Product Compatibility	BSH (140 mm, 4 motor stacks) SH3 MH3 ILM
Reduction Ratio	12:1

Complementary

Maximum Torsional Backlash	10 arc.min
Torsional Rigidity	41 N.m/arcmin
Housing Colour	Black
Housing Material	Black anodized aluminium
Shaft Material	C 45
Additional Information	Lubricated for life
Service Life In Hours	30000 h at 100 rpm at 30 °C
Efficiency	94 %
Mounting Position	Any position
Maximum Radial Force Fr	4200 N at 100 rpm, force applied at mid-distance from output shaft during 30000 hour at 30 °C 6000 N at 100 rpm, force applied at mid-distance from output shaft during 10000 hour at 30 °C
Maximum Axial Force Fa	6000 N at 100 rpm, during 30000 hour at 30°C 8000 N at 100 rpm, during 10000 hour at 30°C
Moment Of Inertia	12.37 g.cm²
Continuous Output Torque	800 N.m at 100 rpm at 30 °C
Maximum Output Torque	1280 N.m at 100 rpm at 30 °C
Net Weight	22 kg

Disclaimer: This documentation is not intended as a substitute for and is not to be used for determining suitability or reliability of these products for specific user applications

Environment

Noise Level	70 dB at 1 m, no-load
Ip Degree Of Protection	Shaft output: IP54
Ambient Temperature For Operation	-25…90 °C

Packing Units

Unit Type Of Package 1	PCE
Number Of Units In Package 1	1
Package 1 Height	26 cm
Package 1 Width	45 cm
Package 1 Length	26 cm
Package 1 Weight	23 kg

Contractual warranty

Warranty	18 months

Sustainability

Green Premium™ label is Schneider Electric's commitment to delivering products with best-in-class environmental performance. Green Premium promises compliance with the latest regulations, transparency on environmental impacts, as well as circular and low-CO_2 products.

Guide to assessing product sustainability is a white paper that clarifies global eco-label standards and how to interpret environmental declarations.

Learn more about Green Premium >

Guide to assess a product's sustainability >

Transparency RoHS/REACh

Well-being performance

Mercury Free	
Rohs Exemption Information	Yes
Pvc Free	

Certifications & Standards

Reach Regulation	REACh Declaration
Eu Rohs Directive	Pro-active compliance (Product out of EU RoHS legal scope)
China Rohs Regulation	China RoHS declaration Product out of China RoHS scope. Substance declaration for your information
Environmental Disclosure	Product Environmental Profile
Circularity Profile	No need of specific recycling operations

Dimensions Drawings

Dimensions

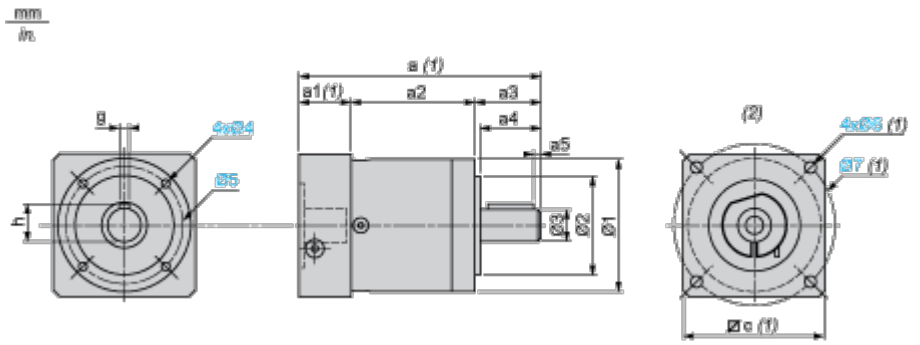

(1) Dimensions a, a1, c, Ø6 and Ø7 depend on the planetary gearbox/servo motor combination

(2) Servo motor assembly

Dimensions in mm

a2	a3	a4	a5	h	g	Ø1	Ø2	Ø3	Ø4 (oblong)	Ø5
153.5	87	80	8	43	12	160	130 h7	40 h7	M12 x 20	145

Dimensions in mm

a	a1	c	Ø6	Ø7
305	64.5	140 x 140	M10	165

Dimensions in in.

a2	a3	a4	a5	h	g	Ø1	Ø2	Ø3	Ø4 oblong	Ø5
6.04	3.42	3.14	0.31	1.69	0.47	6.29	5.12 h7	1.57 h7	M12 x 0.79	5.70

Dimensions in in.

a	a1	c	Ø6	Ø7
12.00	2.53	0.21 x 0.21	M10	6.49