Product datasheet

Specifications

Green Premium™

motion servo drive, Lexium 32, 10A, single phase, supply voltage 115 to 230V, 0.8 to 1.6kW

LXM32SD30M2

Discontinued on: 01-Nov-2020

Discontinued

Main

Range Of Product	Lexium 32
Product Or Component Type	Motion servo drive
Device Short Name	LXM32S
Format Of The Drive	Book
Network Number Of Phases	Single phase
[Us] Rated Supply Voltage	100...120 V - 15...10 % 200...240 V - 15...10 %
Supply Voltage Limits	85…132 V 170…264 V
Supply Frequency	50/60 Hz - 5...5 %
Network Frequency	47.5...63 Hz
Emc Filter	Integrated
Continuous Output Current	10 A at 8 kHz
Output Current 3S Peak	15 A at 115 V for 5 s 30 A at 230 V for 5 s
Maximum Continuous Power	800 W at 115 V 2200 W at 230 V
Nominal Power	0.8 kW at 115 V 8 kHz 1.6 kW at 230 V 8 kHz
Line Current	9.9 A 72 % at 115 V, with external line choke of 2 mH 14.1 A 86 % at 230 V, with external line choke of 2 mH 12.9 A 135 % at 115 V, without line choke 12.7 A 135 % at 230 V, without line choke

Complementary

Switching Frequency	8 kHz
Overvoltage Category	III
Maximum Leakage Current	30 mA
Output Voltage	<= power supply voltage
Electrical Isolation	Between power and control
Type Of Cable	Single-strand IEC cable (temperature: 50 °C) copper 90 °C XLPE/EPR
Electrical Connection	Terminal, clamping capacity: 3 mm², AWG 12 (CN8)
Tightening Torque	CN8: 0.5 N.m
Discrete Input Number	2 capture discrete input(s)

Disclaimer: This documentation is not intended as a substitute for and is not to be used for determining suitability or reliability of these products for specific user applications

Discrete Input Type	Capture (CAP terminals)
Sampling Duration	0.25 ms
Discrete Input Voltage	24 V DC for capture
Discrete Input Logic	Positive (compliment of STO_A, compliment of STO_B) at State 0: < 5 V at State 1: > 15 V conforming to EN/IEC 61131-2 type 1
Response Time	<= 5 ms compliment of STO_A, compliment of STO_B
Discrete Output Number	3
Discrete Output Type	Logic output(s) (DO)24 V DC
Discrete Output Voltage	<= 30 V DC
Discrete Output Logic	Positive or negative (DO) conforming to EN/IEC 61131-2
Contact Bounce Time	<= 1 ms for compliment of STO_A, compliment of STO_B
Braking Current	50 mA
Response Time On Output	250 µs (DO) for discrete output(s)
Safety Function	STO (safe torque off), integrated
Safety Level	SIL 3 conforming to EN/IEC 61508
Communication Interface	Modbus, integrated SERCOS III, integrated
Connector Type	RJ45 (labelled CN7) for Modbus
Commissioning Port	2-wire RS485 multidrop for Modbus
Transmission Rate	9600, 19200, 38400 bps for bus length of 40 m for Modbus
Number Of Addresses	1…247 for Modbus
Status Led	1 LED (red) servo drive voltage
Signalling Function	Display of faults 7 segments
Marking	CE
Operating Position	Vertical +/- 10 degree
Product Compatibility	Servo motor BMH (70 mm, 2 motor stacks)
Width	68 mm
Height	270 mm
Depth	237 mm
Net Weight	2.1 kg

Environment

Electromagnetic Compatibility	Conducted EMC conforming to EN 55011 class A group 1
Standards	EN/IEC 61800-3
Product Certifications	CSA
Ip Degree Of Protection	IP20 conforming to EN/IEC 60529
Vibration Resistance	1 gn (f= 13…150 Hz) conforming to EN/IEC 60068-2-6
Shock Resistance	15 gn for 11 ms conforming to EN/IEC 60028-2-27
Pollution Degree	2 conforming to EN/IEC 61800-5-1
Environmental Characteristic	Classes 3C1 conforming to IEC 60721-3-3
Relative Humidity	Class 3K3 (5 to 85 %) without condensation conforming to IEC 60721-3-3
Ambient Air Temperature For Operation	0…50 °C conforming to UL

Ambient Air Temperature For Storage	-25…70 °C
Type Of Cooling	Integrated fan
Operating Altitude	<= 1000 m without derating

Packing Units

Unit Type Of Package 1	PCE
Number Of Units In Package 1	1
Package 1 Height	10.6 cm
Package 1 Width	27.5 cm
Package 1 Length	33 cm
Package 1 Weight	2.613 kg
Unit Type Of Package 2	S03
Number Of Units In Package 2	2
Package 2 Height	30 cm
Package 2 Width	30 cm
Package 2 Length	40 cm
Package 2 Weight	6.16 kg
Unit Type Of Package 3	P06
Number Of Units In Package 3	16
Package 3 Height	80 cm
Package 3 Width	80 cm
Package 3 Length	60 cm
Package 3 Weight	56.012 kg

Contractual warranty

Warranty	18 months

Sustainability

Green Premium™ label is Schneider Electric's commitment to delivering products with best-in-class environmental performance. Green Premium promises compliance with the latest regulations, transparency on environmental impacts, as well as circular and low-CO_2 products.

Guide to assessing product sustainability is a white paper that clarifies global eco-label standards and how to interpret environmental declarations.

Learn more about Green Premium >

Guide to assess a product's sustainability >

Transparency RoHS/REACh

Well-being performance

Mercury Free	
Rohs Exemption Information	Yes
Pvc Free	

Certifications & Standards

Reach Regulation	REACh Declaration
Eu Rohs Directive	Pro-active compliance (Product out of EU RoHS legal scope)
China Rohs Regulation	China RoHS declaration
Environmental Disclosure	Product Environmental Profile
Weee	The product must be disposed on European Union markets following specific waste collection and never end up in rubbish bins
Circularity Profile	End of Life Information

Dimensions Drawings

Lexium 32 Servo Drive

Dimensions

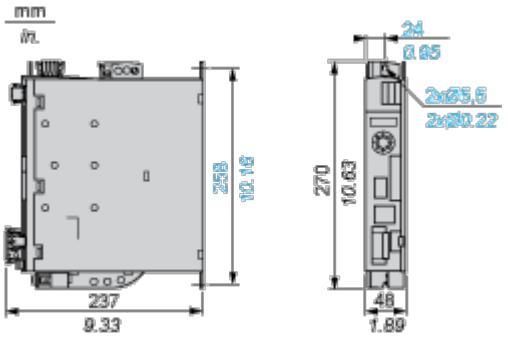

Mounting and Clearance

Lexium 32 Motion Control Servo Drives

Mounting Recommendations

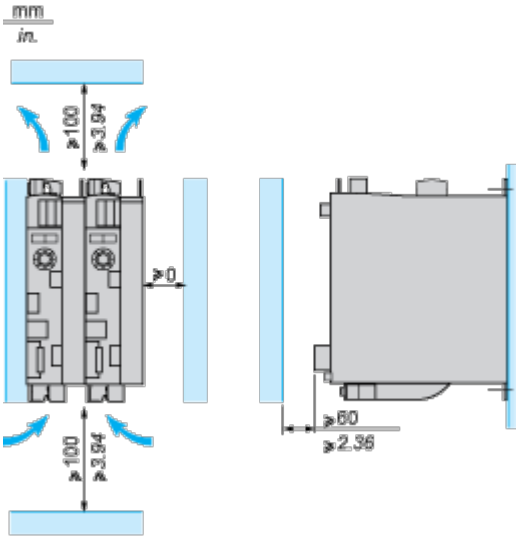

LXM32•U45M2, •U90M2 and LXM32•U60N4 servo drives are cooled by natural convection. LXM32•D18M2, •D30M2, LXM32 •D12N4, •D18N4, •D30N4 and •D72N4servo drives have an integrated fan.
When installing the servo drive in the enclosure, follow the instructions below with regard to the temperature and protection index:

- Provide sufficient cooling of the servo drive
- Do not mount the servo drive near heat sources
- Do not mount the servo drive on flammable materials
- Do not heat the servo drive cooling air by currents of hot air from other equipment and components, for example from an external braking resistor
- Mount the servo drive vertically (± 10%)
- If the servo drive is used above its thermal limits, control stops due to overtemperature

NOTE: For cables that are connected via the underside of the servo drive, a free space ≥ 200 mm/7.87 in. is required under the unit to comply with the bending radius of the connection cables.

Ambient temperature	Mounting distances	Instructions to be followed
0°C…+ 50°C	d ≥ 0 mm	–
+ 50°C…+ 60°C	d ≥ 0 mm	Reduce the output current by 2.2% per °C above 50°C

NOTE: Do not use insulated enclosures, as they have a poor level of conductivity.

Recommendations for Mounting in an Enclosure

To ensure good air circulation in the servo drive:

- Fit ventilation grilles on the enclosure.
- Ensure that ventilation is adequate, otherwise install a forced ventilation unit with a filter.

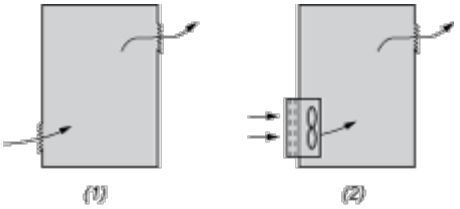

(1) Natural convection

(2) Forced ventilation

- Any apertures and/or fans must provide a flow rate at least equal to that of the servo drive fans (refer to characteristics).
- Use special filters with IP 54 protection.

Mounting in Metal Enclosure (IP 54 Degree of Protection)

The servo drive must be mounted in a dust and damp proof enclosure in certain environmental conditions, such as dust, corrosive gases, high humidity with risk of condensation and dripping water, splashing liquid, etc. In these cases, Lexium 32 servo drives can be installed in an enclosure where the internal temperature must not exceed 60°C.