Product datasheet

Specifications

Green Premium™

REL52101 discontinued. To order it, click on blue Product Selector button, configure P3U30, and use its output xml file

REL52101

Discontinued

Discontinued on: 13-Mar-2024

Main

Range Of Product	Easergy P3
Product Or Component Type	Protection relay
Relay Application	Feeder
Product Reference	P3F30-CGGGG-AAENA-BAAAA
Power Supply	48...230 V AC/DC
Measuring Inputs	: 1/5 A CT phase current 3 : 5/1 A CT residual current 1 : 1/0.2 A CT residual current 1 : 100 V/110 V VT voltage 4
Number Of Digital Inputs (Di)	24
Number Of Digital Outputs (Do)	1 watchdog 21
Number Of Analogue Outputs	0
Communication Ports	USB port 1 front RJ45 2 rear
Communication Protocols	IEC 61850 ed. 1 IEC 61850 ed. 2 IEC 60870-5-101 DNP3 TCP Modbus TCP EtherNet/IP
Redundancy Communication Port Protocol	RSTP PRP
Cybersecurity	Password protection Port hardening

Disclaimer: This documentation is not intended as a substitute for and is not to be used for determining suitability or reliability of these products for specific user applications

Protection Functions	Phase overcurrent 50/51 Directional phase overcurrent 67 Earth fault overcurrent 50N/51N Directional earth fault 67N Transient earth fault 67NI Capacitor bank unbalance 51C Broken conductor 46 I2/I1 Cold load pick-up Switch ON to fault (SOTF) Breaker failure 50BF Directional active underpower 37P Fault locator 21FL Recloser 79 Phase undercurrent 37 Excessive starting time, locked rotor 48/51LR Motor restart inhibition 66 Capacitor overvoltage 59C Negative sequence overcurrent 46 Overvoltage 59 Undervoltage 27 Positive sequence undervoltage 27P Earth fault overvoltage 59N Underfrequency 81/81N Rate of change of frequency 81R Synchro-check 25 Lockout relay 86 CT supervision 60 VT supervision 60 H2 detection 68H2 H2 detection H5 detection 68H5 Programmable stages 99 Programmable curve H5 detection
Arc Flash Protection	No
Measurement Functions	Current 3-phase Current zero sequence Current positive sequence Current negative sequence Current ratio of negative and positive Voltage phase to earth Voltage phase to phase Voltage zero sequence Voltage positive sequence Voltage negative sequence Voltage ratio of negative and positive Short circuit fault reactance Fault location current Earth fault reactance Frequency Active power RMS active power Reactive power RMS reactive power Apparent power RMS apparent power Active energy Reactive energy Cos φ Tan φ Power angle Power factor Voltage phasor diagram view Current phasor diagram view Current 2nd, 15th harmonics with THD Voltage 2nd, 15th harmonics with THD Voltage interruption Condition monitoring CB wear

Control Functions	Switchgear control and monitoring Programmable switchgear interlocking Local control on single-line diagram Local control with I/O keys Local/remote control 2 function keys Mobile application with Easergy SmartApp Web-server Programmable logic
Controllable Switchgear Devices	6 controlled + 8 displayed
Number Of Setting Groups	4
Monitoring Functions	Trip circuit supervision 74 Circuit breaker monitoring Relay self-monitoring
Logs And Records	Event recording Disturbance recording Tripping context
Switchgear Diagnosis Type	CT/VT supervision ANSI code: 60 CT supervision Trip circuit supervision ANSI code: TCS
Connections - Terminals	Screw removable (digital input/output) Pin fixed (current transformer) Pin removable (voltage transformer)

Complementary

Operating Threshold	24...230 V AC/DC
Time Synchronisation Protocol	SNTP
Software Name	EcoStruxure Power Device ESetup Easergy Pro
Web Server	Embedded HTTP server
Display Type	LCD 128 x 128 pixels with single line diagram
Number Of Key	2 customizable
Local Signalling	2 LEDs 16 LEDs programmable
Standards	IEC
Height	176 mm
Width	270 mm
Depth	230 mm
Net Weight	4.2 kg maximum

Environment

Electromagnetic Compatibility	Emission tests conforming to IEC/EN 60255-26 ed. 3 Emission tests class A conforming to CISPR 11 Emission tests class A conforming to CISPR 22 EMC immunity conforming to IEC/EN 60255-26 ed. 3 EMC immunity conforming to EN/IEC 61000-4-18 EMC immunity level 4 conforming to EN/IEC 61000-4-2 EMC immunity level 3 conforming to EN/IEC 61000-4-3 EMC immunity level 4 conforming to EN/IEC 61000-4-4 EMC immunity level 3 conforming to EN/IEC 61000-4-5 EMC immunity level 3 conforming to EN/IEC 61000-4-6 EMC immunity conforming to EN/IEC 61000-4-8 EMC immunity level 5 conforming to EN/IEC 61000-4-9 EMC immunity conforming to EN/IEC 61000-4-29 EMC immunity conforming to EN/IEC 61000-4-11 EMC immunity conforming to EN/IEC 61000-4-17

Mechanical Robustness	Vibrations (level: class II) conforming to IEC 60255-21-1 Vibrations: Fc conforming to IEC 60068-2-6 Shocks (level: class II) conforming to IEC 60255-21-2 Shocks: Ea conforming to IEC 60068-2-27 Seismic tests method A (level: class II) conforming to IEC 60255-21-3 Bumps (level: class II) conforming to IEC 60255-21-2 Bumps: Ea conforming to IEC 60068-2-27
Climatic Withstand	Exposure to dry heat Bb tests conforming to EN/IEC 60068-2-2 Exposure to cold Ad tests conforming to EN/IEC 60068-2-1 Exposure to damp heat in service Db tests conforming to EN/IEC 60068-2-30 Exposure to damp heat in service Cab tests conforming to EN/IEC 60068-2-78
Ambient Air Temperature For Operation	-40…65 °C
Relative Humidity	0…95 %, without condensation
Maximum Operating Altitude	2000 m
Protective Treatment	Conformal coating

Packing Units

Unit Type Of Package 1	PCE
Number Of Units In Package 1	1
Package 1 Height	21 cm
Package 1 Width	26 cm
Package 1 Length	31.5 cm
Package 1 Weight	5.2 kg

Contractual warranty

Warranty	Up to 10 years extended warranty (Standard warranty 2 years. Please check with your local SE representative for extended warranty availability and conditions)

Sustainability

Green Premium™ label is Schneider Electric's commitment to delivering products with best-in-class environmental performance. Green Premium promises compliance with the latest regulations, transparency on environmental impacts, as well as circular and low-CO_2 products.

Guide to assessing product sustainability is a white paper that clarifies global eco-label standards and how to interpret environmental declarations.

Learn more about Green Premium >

Guide to assess a product's sustainability >

Transparency RoHS/REACh

Well-being performance

Mercury Free

Rohs Exemption Information	Yes

Certifications & Standards

Reach Regulation	REACh Declaration
Eu Rohs Directive	Pro-active compliance (Product out of EU RoHS legal scope)
China Rohs Regulation	China RoHS declaration
Environmental Disclosure	Product Environmental Profile
Weee	The product must be disposed on European Union markets following specific waste collection and never end up in rubbish bins
Circularity Profile	End of Life Information

Connections and Schema

Functional View

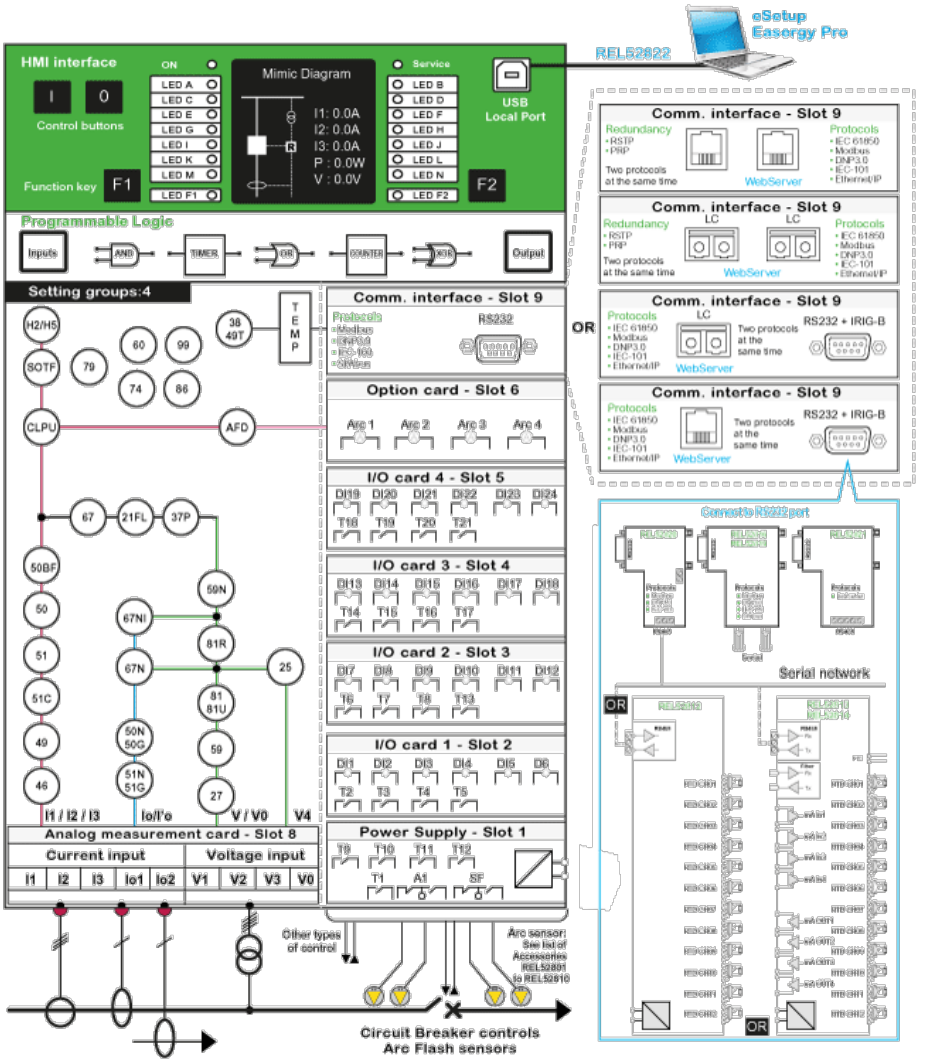

Dimensions Drawings
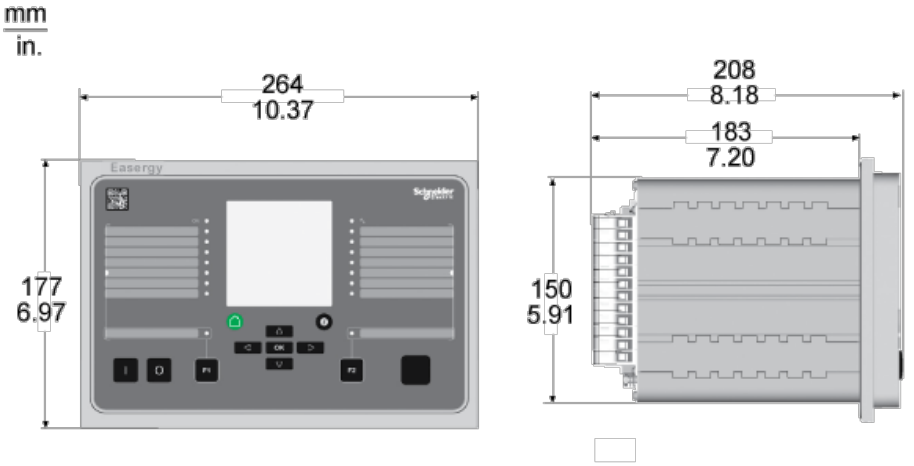
Base Unit Dimensions