# Product datasheet

Specifications

## Modular multifunction 3-phase supply control relay, 5 A, 1 CO, 208...480 V AC

RM17TA00

## Main

| | |
|---|---|
| **Range Of Product** | Harmony Control Relays |
| **Relay Type** | Multifunction control relay |
| **Product Or Component Type** | 3-phase control relay |
| **Product Specific Application** | For 3-phase supply |
| **Relay Name** | RM17TA |
| **Relay Monitored Parameters** | Asymmetry<br>Phase sequence<br>Phase failure detection |
| **Time Delay** | Adjustable 0.1...10 s, +/- 10 % of the full scale value Tt- time delay upon fault |
| **Switching Capacity In Va** | 1250 VA |
| **Measurement Range** | 208...480 V AC |
| **Contacts Type And Composition** | 1 C/O |
| **[Uc] Control Circuit Voltage** | 208...480 V |

## Complementary

| | |
|---|---|
| **Reset Time** | 1500 ms time delay |
| **Maximum Switching Voltage** | 250 V AC<br>250 V DC |
| **Minimum Switching Current** | 10 mA at 5 V DC |
| **Maximum Switching Current** | 5 A AC<br>5 A DC |
| **[Un] Rated Nominal Voltage** | , self-powered |
| **Supply Voltage Limits** | 183…528 V AC |
| **Control Circuit Voltage Limits** | - 12 % + 10 % Un |
| **Power Consumption In Va** | 0…22 VA at 400 V AC 50 Hz |
| **Control Circuit Frequency** | 50...60 Hz +/- 10 % |
| **Output Contacts** | 1 C/O |
| **Nominal Output Current** | 5 A |
| **Measurement Voltage Limits** | 183…528 V AC |
| **Hysteresis** | 2 % |
| **Delay At Power Up** | 650 ms |
| **Maximum Measuring Cycle** | 150 ms measurement cycle as true rms value |
| **Voltage Range** | 208...480 V phase to phase |

Disclaimer: This documentation is not intended as a substitute for and is not to be used for determining suitability or reliability of these products for specific user applications

| | |
|---|---|
| **Adjustment Of Asymmetry Threshold** | 5...15 % of Un selected |
| **Repeat Accuracy** | 0.5 % for input and measurement circuit<br>3 % for time delay |
| **Measurement Error** | < 0.05 %/°C with temperature variation<br>< 1 % over the whole range with voltage variation |
| **Phase Failure Sensitivity** | 0.7 Un |
| **Response Time** | < 200 ms (in the event of a fault) |
| **Marking** | CE |
| **Overvoltage Category** | III conforming to IEC 60664-1 |
| **Insulation Resistance** | > 500 MOhm at 500 V DC conforming to IEC 60255-5<br>> 500 MOhm at 500 V DC conforming to IEC 60664-1 |
| **[Ui] Rated Insulation Voltage** | 400 V conforming to IEC 60664-1 |
| **Supply Frequency** | 50/60 Hz +/- 10 % |
| **Operating Position** | Any position without derating |
| **Connections - Terminals** | Screw terminals, 1 x 0.5...1 x 4 mm² (AWG 20...AWG 11) solid without cable end<br>Screw terminals, 2 x 0.5...2 x 2.5 mm² (AWG 20...AWG 14) solid without cable end<br>Screw terminals, 1 x 0.2...1 x 2.5 mm² (AWG 24...AWG 12) flexible with cable end<br>Screw terminals, 2 x 0.2...2 x 1.5 mm² (AWG 24...AWG 16) flexible with cable end |
| **Tightening Torque** | 0.6…1 N.m conforming to IEC 60947-1 |
| **Housing Material** | Self-extinguishing plastic |
| **Local Signalling** | LED (green) for power ON<br>LED (yellow) for relay ON |
| **Mounting Support** | 35 mm symmetrical DIN rail conforming to IEC 60715 |
| **Electrical Durability** | 100000 cycles |
| **Mechanical Durability** | 30000000 cycles |
| **Operating Rate** | <= 360 operations/hour full load |
| **Utilisation Category** | AC-12 conforming to IEC 60947-5-1<br>AC-13 conforming to IEC 60947-5-1<br>AC-14 conforming to IEC 60947-5-1<br>AC-15 conforming to IEC 60947-5-1<br>DC-12 conforming to IEC 60947-5-1<br>DC-13 conforming to IEC 60947-5-1 |
| **Safety Reliability Data** | MTTFd = 502.2 years<br>B10d = 470000 |
| **Width** | 17.5 mm |
| **Net Weight** | 0.13 kg |
| **Control Type** | Without test button |

# Environment

| | |
|---|---|
| **Electromagnetic Compatibility** | Emission standard for industrial environments conforming to IEC 61000-6-4<br>Emission standard for residential, commercial and light-industrial environments conforming to IEC 61000-6-3<br>Immunity for industrial environments conforming to IEC 61000-6-2 |
| **Standards** | IEC 60255-1 |
| **Product Certifications** | GOST<br>CSA<br>GL<br>C-Tick<br>UL |
| **Directives** | 89/336/EEC - electromagnetic compatibility<br>73/23/EEC - low voltage directive |

| | |
|---|---|
| **Ambient Air Temperature For Storage** | -40…70 °C |
| **Ambient Air Temperature For Operation** | -20…50 °C |
| **Relative Humidity** | 95 % at 55 °C conforming to IEC 60068-2-30 |
| **Vibration Resistance** | 0.35 mm (f= 5…57.6 Hz) conforming to IEC 60068-2-6<br>1 gn (f= 57.6…150 Hz) conforming to IEC 60255-21-1 |
| **Shock Resistance** | 15 gn for 11 ms conforming to IEC 60255-21-1 |
| **Ip Degree Of Protection** | IP20 (terminals) conforming to IEC 60529<br>IP30 (casing) conforming to IEC 60529 |
| **Pollution Degree** | 3 conforming to IEC 60664-1 |
| **Dielectric Test Voltage** | 2 kV, 1 min AC 50 Hz conforming to IEC 60255-5<br>2 kV, 1 min AC 50 Hz conforming to IEC 60664-1 |
| **Non-Dissipating Shock Wave** | 4 kV conforming to IEC 60255-5<br>4 kV conforming to IEC 60664-1<br>4 kV conforming to IEC 61000-4-5 |

## Packing Units

| | |
|---|---|
| **Unit Type Of Package 1** | PCE |
| **Number Of Units In Package 1** | 1 |
| **Package 1 Height** | 2.800 cm |
| **Package 1 Width** | 7.800 cm |
| **Package 1 Length** | 9.600 cm |
| **Package 1 Weight** | 92.000 g |
| **Unit Type Of Package 2** | S02 |
| **Number Of Units In Package 2** | 48 |
| **Package 2 Height** | 15.000 cm |
| **Package 2 Width** | 30.000 cm |
| **Package 2 Length** | 40.000 cm |
| **Package 2 Weight** | 4.935 kg |

## Contractual warranty

| | |
|---|---|
| **Warranty** | 18 months |

## Sustainability

**Green Premium™ label** is Schneider Electric's commitment to delivering products with best-in-class environmental performance. Green Premium promises compliance with the latest regulations, transparency on environmental impacts, as well as circular and low-$CO_2$ products.

**Guide to assessing product sustainability** is a white paper that clarifies global eco-label standards and how to interpret environmental declarations.

Learn more about Green Premium >

Guide to assess a product's sustainability >

Transparency RoHS/REACh

## Well-being performance

Mercury Free

| | |
|---|---|
| Rohs Exemption Information | Yes |

## Certifications & Standards

| | |
|---|---|
| **Reach Regulation** | REACh Declaration |
| **Eu Rohs Directive** | Pro-active compliance (Product out of EU RoHS legal scope) |
| **China Rohs Regulation** | China RoHS declaration |
| **Environmental Disclosure** | Product Environmental Profile |
| **Circularity Profile** | End of Life Information |

Dimensions Drawings

## Multifunction 3-Phase Supply Control Relays

### Dimensions and Mounting

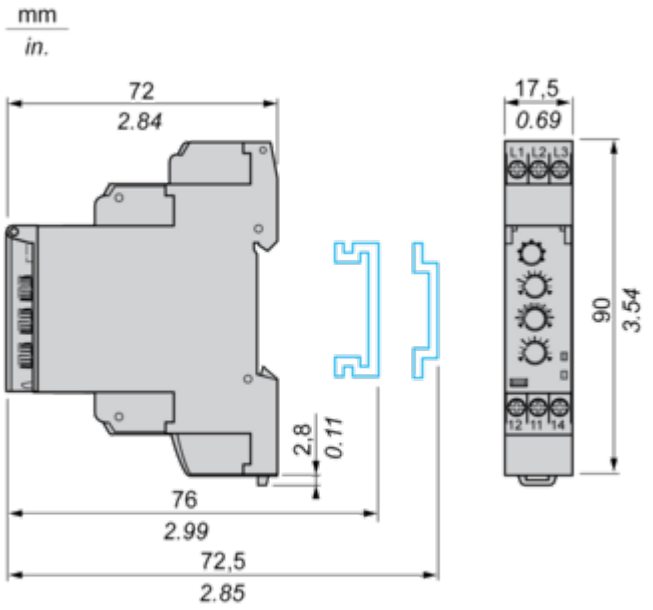

Connections and Schema

**Multifunction 3-Phase Supply Control Relays**

**Wiring Diagram**

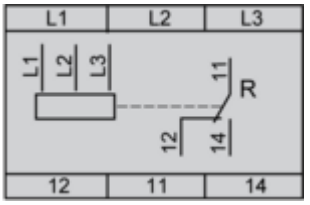

Technical Description

## Function Diagram

### Phase Sequence Control, Phase Failure Detection (U measured < 0.7 x nominal supply voltage), and Asymmetry Detection

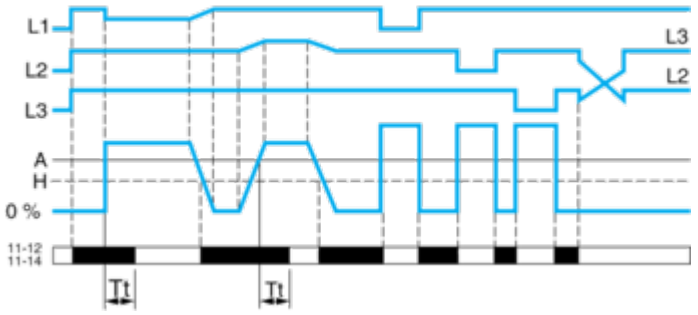


### Legend

**Tt** Time delay after crossing of threshold
**L1, L2, L3** Phases of the supply voltage monitored
**A** Asymmetry threshold
**H** Hysteresis
**11-12, 11-14** Output relay connections
**Relay status:** black color = energized.