Product datasheet

Specifications

Green Premium™

Interface plug-in relay, 6 A, 1 CO, with LED, 60 V DC

RSL1PRFU

Discontinued

Main

Range Of Product	Harmony Electromechanical Relays
Series Name	Interface relay
Product Or Component Type	Pre-assembled plug-in relay with socket
Device Short Name	RSL
Contacts Type And Composition	1 C/O
Contact Operation	Standard
[Uc] Control Circuit Voltage	110 V DC
[Ithe] Conventional Enclosed Thermal Current	6 A at -40…55 °C
Status Led	With
Shape Of Pin	Flat (PCB type)

Complementary

Fixing Mode	Plastic compression spring
Average Resistance	20500 Ohm network: DC at 23 °C +/- 10 %
[Ui] Rated Insulation Voltage	250 V conforming to IEC 277 V conforming to cUL
[Uimp] Rated Impulse Withstand Voltage	6 kV conforming to IEC
Contacts Material	Silver alloy (AgSnO2)
[Ie] Rated Operational Current	6 A 1 C/O (AC-1/DC-1) conforming to IEC/UL
Minimum Switching Current	100 mA
Maximum Switching Voltage	277 V
Minimum Switching Voltage	12 V
Maximum Switching Capacity	1500 VA 150 W
Minimum Switching Capacity	120 mW
Operating Rate	<= 72000 cycles/hour no-load <= 360 cycles/hour under load
Mechanical Durability	10000000 cycles
Electrical Durability	60000 cycles for resistive load, 6 A at 250 V, AC-1
Operating Time	5 ms reset 12 ms
Reset Time	20 ms

Disclaimer: This documentation is not intended as a substitute for and is not to be used for determining suitability or reliability of these products for specific user applications

Marking	CE
Protection Category	RT III
Test Levels	Level A group mounting
Operating Position	Any position
Height	78.6 mm
Width	6.2 mm
Depth	101 mm
Terminals Description Iso N°1	(11-12-14)OC (A1-A2)CO
Sale Per Indivisible Quantity	10
Net Weight	0.029 kg
Load Current	6 A at 250 V AC 0.5 mm mounting distance
Average Coil Consumption	0.17 W, DC
Drop-Out Voltage Threshold	>= 0.05 Uc
Contact Terminal Arrangement	Separate
Connections - Terminals	Spring terminals, 1 x 0.2...1 x 1.5 mm² (AWG 24...AWG 16) flexible with cable end Spring terminals, 1 x 0.2...1 x 1.5 mm² (AWG 24...AWG 16) solid without cable end
Safety Reliability Data	B10d = 60000
Clamping Force	10…40 N
Control Type	Without push-button
Mounting Support	35 mm symmetrical DIN rail
Device Presentation	Complete product

Environment

Input Voltage	110 V AC/DC (input voltage limit: 88...126.5 V)
Dielectric Strength	1000 V AC between contacts 4000 V AC between coil and contact
Standards	IEC 61810-1 UL 508 CSA C22.2 No 14
Product Certifications	CSA GOST UL
Ambient Air Temperature For Storage	-40…85 °C
Vibration Resistance	10 gn, amplitude = +/- 1 mm (f = 10…150 Hz)10 cycles not operating conforming to IEC 60068-2-6 5 gn, amplitude = +/- 1 mm (f = 10…150 Hz)10 cycles in operation conforming to IEC 60068-2-6
Ip Degree Of Protection	IP40 conforming to IEC 60529
Shock Resistance	10 gn (duration = 11 ms) for in operation conforming to IEC 60068-2-27 5 gn (duration = 11 ms) for not operating conforming to IEC 60068-2-27
Ambient Air Temperature For Operation	-40…70 °C

Packing Units

Unit Type Of Package 1	PCE
Number Of Units In Package 1	1

Package 1 Height	0.7 cm
Package 1 Width	8 cm
Package 1 Length	9.7 cm
Package 1 Weight	30 g
Unit Type Of Package 2	BB1
Number Of Units In Package 2	10
Package 2 Height	7 cm
Package 2 Width	10.3 cm
Package 2 Length	8.5 cm
Package 2 Weight	312 g
Unit Type Of Package 3	S03
Number Of Units In Package 3	300
Package 3 Height	30 cm
Package 3 Width	30 cm
Package 3 Length	40 cm
Package 3 Weight	9.573 kg

Contractual warranty

Warranty	18 months

Sustainability

Green Premium™ label is Schneider Electric's commitment to delivering products with best-in-class environmental performance. Green Premium promises compliance with the latest regulations, transparency on environmental impacts, as well as circular and low-CO_2 products.

Guide to assessing product sustainability is a white paper that clarifies global eco-label standards and how to interpret environmental declarations.

Learn more about Green Premium >

Guide to assess a product's sustainability >

Transparency RoHS/REACh

Well-being performance

Reach Free Of Svhc	
Toxic Heavy Metal Free	
Mercury Free	
Rohs Exemption Information	Yes
Toxic Free	
Phenolic Free Solution	

Certifications & Standards

Reach Regulation	REACh Declaration
Eu Rohs Directive	Pro-active compliance (Product out of EU RoHS legal scope) EU RoHS Declaration
China Rohs Regulation	China RoHS declaration
Environmental Disclosure	Product Environmental Profile
Weee	The product must be disposed on European Union markets following specific waste collection and never end up in rubbish bins
Circularity Profile	End of Life Information

Dimensions Drawings
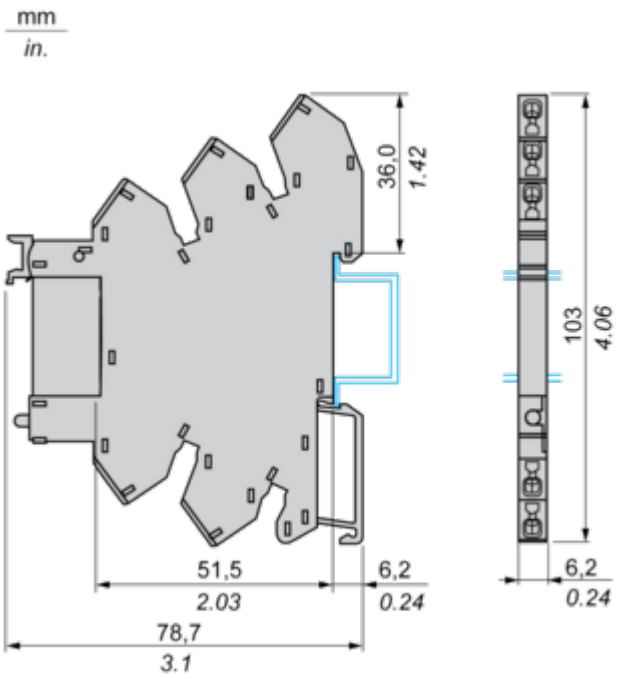
Dimensions