Product datasheet

Specifications

Green Premium™

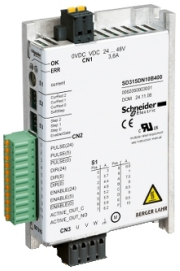

motion control stepper motor drive - SD315 - pulse direction with oscillator

SD315ON10B400

Discontinued on: 01-Nov-2020

Discontinued

Main

Range Of Product	Lexium SD3
Product Or Component Type	Motion stepper drive
Device Short Name	SD315
Supply Voltage Limits	19…60 V

Complementary

Format Of The Drive	Block
Network Number Of Phases	Single phase
[Us] Rated Supply Voltage	24...48 V - 15...10 %
Supply Voltage Type	DC
Communication Interface	Pulse/direction, integrated
Maximum Motor Phase Current	10 A
Current Consumption	<= 7.5 mA
Power Losses	<= 7 W
Associated Fuse Rating	10 A
Overvoltage Category	III
Maximum Leakage Current	30 mA
Voltage State 0 Guaranteed	<= 5 V for 24 V optocoupler input signals <= 0.4 V for 5 V optocoupler input signals
Voltage State 1 Guaranteed	15...30 V for 24 V optocoupler input signals 2.5...5.25 V for 5 V optocoupler input signals
Input Current	25 mA for 5 V optocoupler input signals 7 mA for 24 V optocoupler input signals
Maximum Input Frequency	200 kHz for 24 V optocoupler input signals 200 kHz for 5 V optocoupler input signals
Maximum Switching Voltage	30 V DC (readiness signal output) 30 V (pulse/direction output signal) 10 V DC (output signal)
Maximum Switching Current	200 mA (readiness signal output) 50 mA (pulse/direction output signal) 20 mA (output signal)
Maximum Voltage Drop	<1 V 50 mA load for readiness signal output <0.5 V for pulse/direction output signal
Physical Interface	RS422 - pulse/direction interface with oscillator
Input Voltage	< 30 V

Disclaimer: This documentation is not intended as a substitute for and is not to be used for determining suitability or reliability of these products for specific user applications

Residual Ripple	< 5 % (24 V control voltage)
Resistance	10 kOhm (external potentiometer)
Analogue Input Type	Voltage 0...10 V, resolution: 10 bits, impedance: 50 kOhm
Local Signalling	1 LED - ERR 1 LED - RUN
Type Of Cooling	Natural convection
Height	117 mm
Width	74.5 mm
Depth	23.5 mm
Shock Resistance	15 gn for 11 ms conforming to IEC 60068-2-27
Net Weight	0.25 kg

Environment

Electromagnetic Compatibility	Electrostatic discharge level 3 conforming to IEC 61000-4-2 Immunity to electrical transients level 4 conforming to IEC 61000-4-4 Immunity to radiated radio-electrical interference level 3 conforming to IEC 61000-4-3 Voltage/current impulse level 3 conforming to IEC 61000-4-5
Standards	IEC 61800-3 environment 1 IEC 61800-3 IEC 50178 IEC 61800-5-1 EN/IEC 61800-3 environment 2
Product Certifications	UL cUL
Marking	CE
Ambient Air Temperature For Operation	0…50 °C
Ambient Air Temperature For Storage	-25…70 °C
Pollution Degree	Level 2
Relative Humidity	5…85 % without condensation
Operating Altitude	<= 1000 m without derating > 1000...< 2000 m without derating (maximum ambient temperature 40°C, lateral distance of > 20 mm)
Vibration Resistance	1 gn (f= 13…150 Hz) conforming to IEC 60068-2-6 1.5 mm (f= 3…13 Hz) conforming to IEC 60068-2-6
Ip Degree Of Protection	IP20

Packing Units

Unit Type Of Package 1	PCE
Number Of Units In Package 1	1
Package 1 Height	6.8 cm
Package 1 Width	12.8 cm
Package 1 Length	19.0 cm
Package 1 Weight	367.0 g
Unit Type Of Package 2	S03
Number Of Units In Package 2	12
Package 2 Height	30.0 cm
Package 2 Width	30.0 cm

Package 2 Length	40.0 cm
Package 2 Weight	4.897 kg

Contractual warranty

Warranty	18 months

Sustainability

Green Premium™ label is Schneider Electric's commitment to delivering products with best-in-class environmental performance. Green Premium promises compliance with the latest regulations, transparency on environmental impacts, as well as circular and low-CO_2 products.

Guide to assessing product sustainability is a white paper that clarifies global eco-label standards and how to interpret environmental declarations.

Learn more about Green Premium >

Guide to assess a product's sustainability >

Transparency RoHS/REACh

Well-being performance

Mercury Free	
Rohs Exemption Information	Yes
Pvc Free	

Certifications & Standards

Reach Regulation	REACh Declaration
Eu Rohs Directive	Pro-active compliance (Product out of EU RoHS legal scope)
China Rohs Regulation	China RoHS declaration
Environmental Disclosure	Product Environmental Profile
Circularity Profile	End of Life Information

Dimensions Drawings

Dimensions

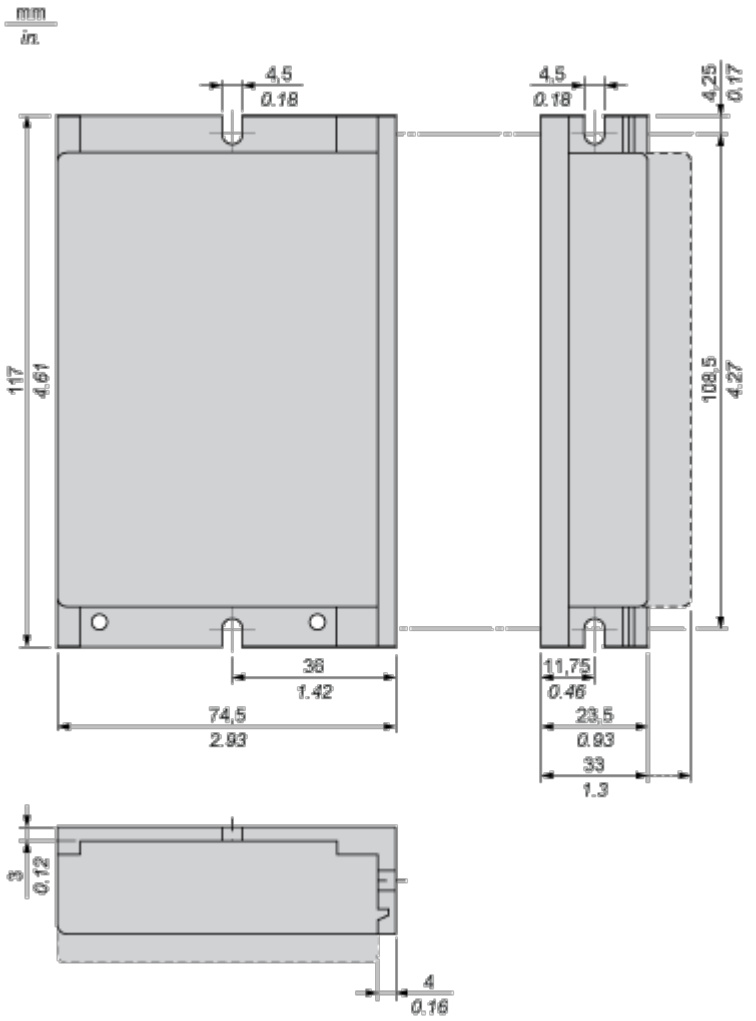

Mounting and Clearance

Mounting and Clearance

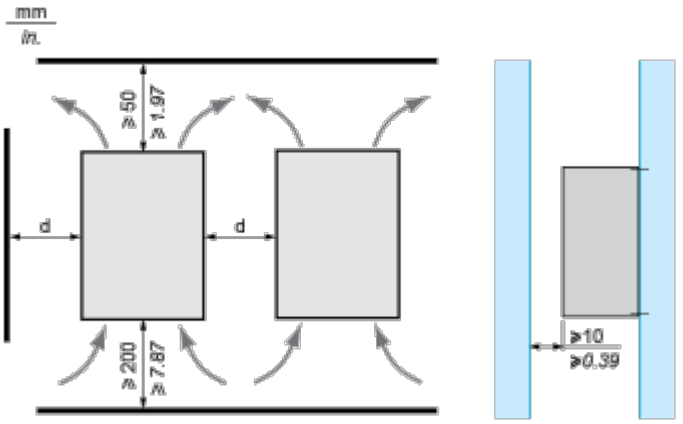

d : >30 mm/1.18 in.

Connections and Schema

Wiring Example with 5 V

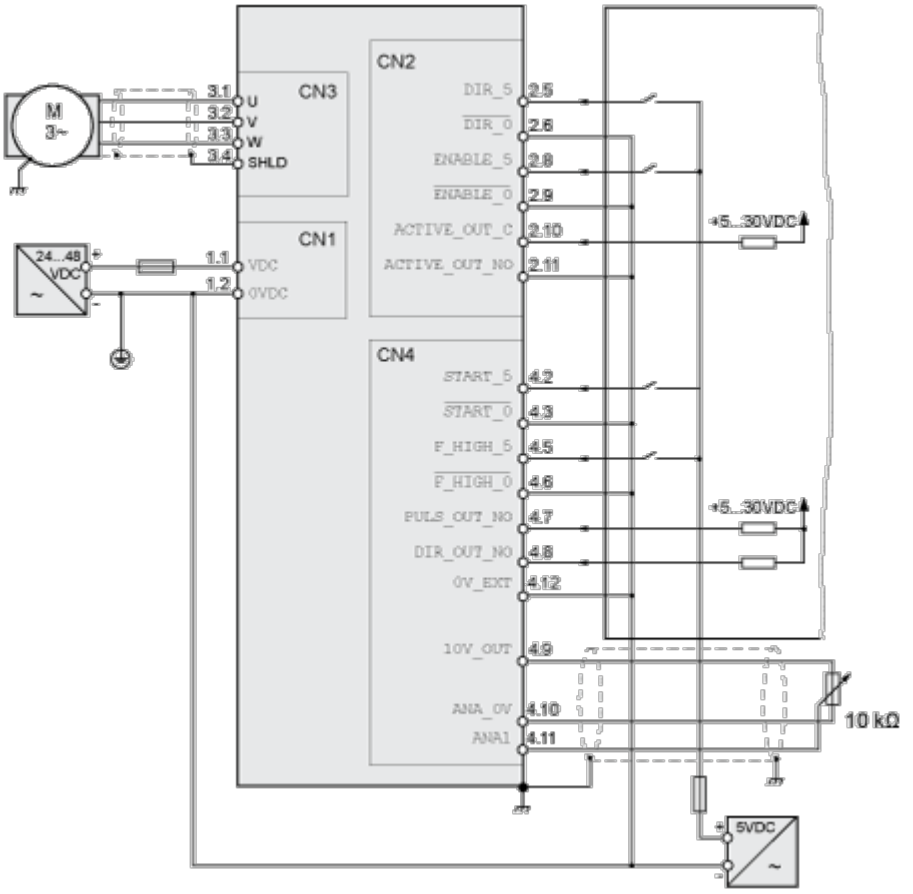
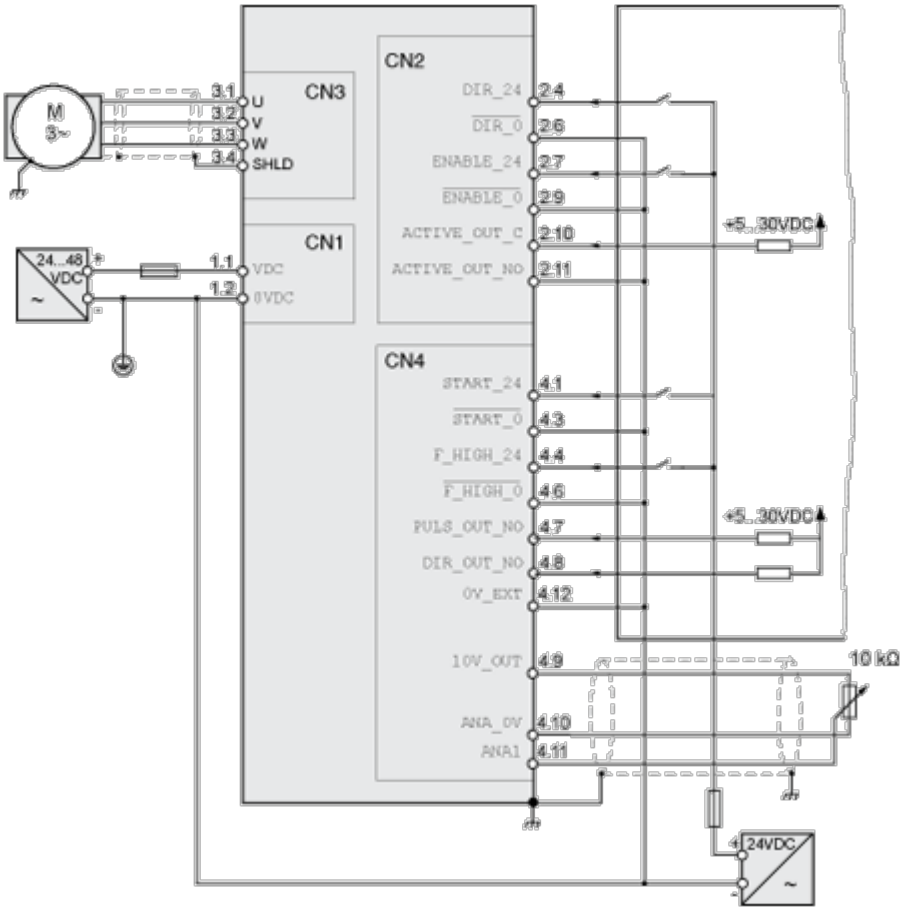
Wiring Example with 24 V