Product datasheet

Specifications

solid state relay - DIN rail mount - input 4-32Vdc, output 48-600Vac, 25A

SSM3A325BD

Main

Range Of Product	Harmony Solid State Relays
Product Or Component Type	Solid state relay up to 30 A
Device Short Name	SSM3
Number Of Channels	3
Number Of Phases	3 phases
Output Switching Mode	Zero voltage switching

Complementary

Mounting Support	Symmetrical DIN rail
[In] Rated Current	25 A
Output Voltage	48...600 V AC
[Uc] Control Circuit Voltage	4...32 V DC
Tightening Torque	0.6...0.7 N.m for input 1.36...1.7 N.m for output
Connections - Terminals	Screw terminals: 0.2...1.3 mm², (AWG 24...AWG 16) for input Screw terminals: 1.3...5.3 mm², (AWG 16...AWG 10) for output
Maximum Capacitance	8 pF for input/output
Insulation Resistance	1000 MOhm
Local Signalling	LED (green) for input status
Switching Voltage	4 V DC turn-on 1 V DC turn-off
Input Current	22…28 mA
Solid State Output Type	Zero voltage switching
Load Current	0.1…25 A
Transient Overvoltage	1100 V
Surge Current	286 A for 20 ms at 50 Hz 300 A for 16.6 ms at 60 Hz
Maximum Voltage Drop	<1.35 V on-state
Motor Power Hp	1 hp 40 °C 240 V AC 2 hp 40 °C 380 V AC 3 hp 40 °C 480 V AC
Maximum I²T For Fusing	410 A².s for 10 ms at 50 Hz 374 A².s for 8.3 ms at 60 Hz
Maximum Leakage Current	0.25 mA off-state
Dv/Dt	500 V/µs off-state at maximum voltage

Disclaimer: This documentation is not intended as a substitute for and is not to be used for determining suitability or reliability of these products for specific user applications

Response Time	0.5 cycle (turn-on) 0.5 cycle (turn-off)
Power Factor	0.5 (with maximum load)
Overvoltage Category	III
Net Weight	0.74 kg

Environment

Dielectric Strength	4 kV AC for input/output 4 kV AC for input or output to case
Pollution Degree	2
Standards	CSA C22.2 No 14 IEC 60950-1 UL 508
Product Certifications	CSA UL EAC
Marking	EAC CSA UL CE
Ip Degree Of Protection	IP20
Ambient Air Temperature For Operation	-20…80 °C
Ambient Air Temperature For Storage	-40…100 °C

Packing Units

Unit Type Of Package 1	PCE
Number Of Units In Package 1	1
Package 1 Height	14.000 cm
Package 1 Width	11.000 cm
Package 1 Length	11.000 cm
Package 1 Weight	764.000 g
Unit Type Of Package 2	S02
Number Of Units In Package 2	5
Package 2 Height	15.000 cm
Package 2 Width	30.000 cm
Package 2 Length	40.000 cm
Package 2 Weight	4.278 kg

Sustainability

Green Premium^{TM} label is Schneider Electric's commitment to delivering products with best-in-class environmental performance. Green Premium promises compliance with the latest regulations, transparency on environmental impacts, as well as circular and low-CO_2 products.

Guide to assessing product sustainability is a white paper that clarifies global eco-label standards and how to interpret environmental declarations.

Learn more about Green Premium >

Guide to assess a product's sustainability >

Transparency

RoHS/REACh

Well-being performance

Mercury Free	
Rohs Exemption Information	Yes

Certifications & Standards

Reach Regulation	REACh Declaration
Eu Rohs Directive	Pro-active compliance (Product out of EU RoHS legal scope)
China Rohs Regulation	China RoHS declaration
Environmental Disclosure	Product Environmental Profile
Circularity Profile	End of Life Information

Dimensions Drawings

Dimensions

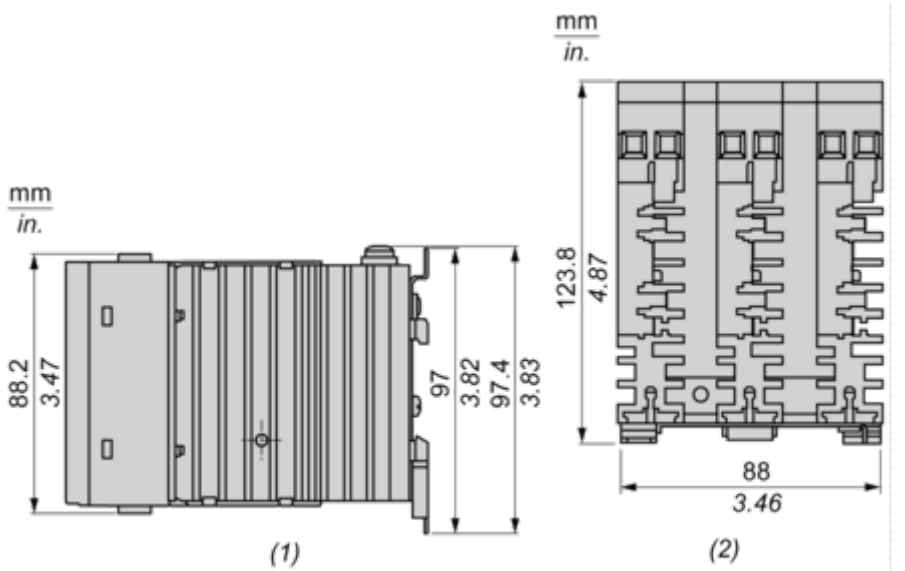

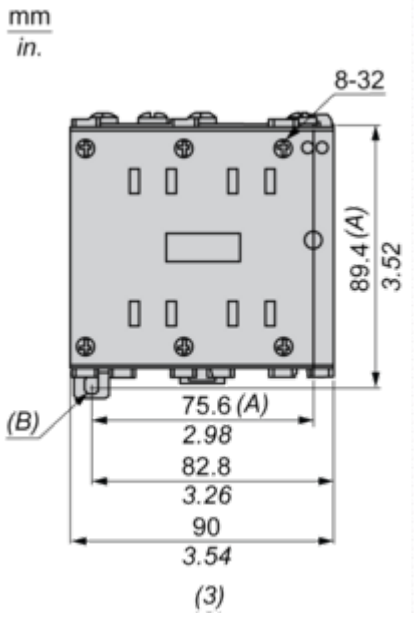

(1) Side view
(2) Top view
(3) Front view
(A) Mounting hole
(B) Mounting hole / slot

Performance Curves

Derating Curves

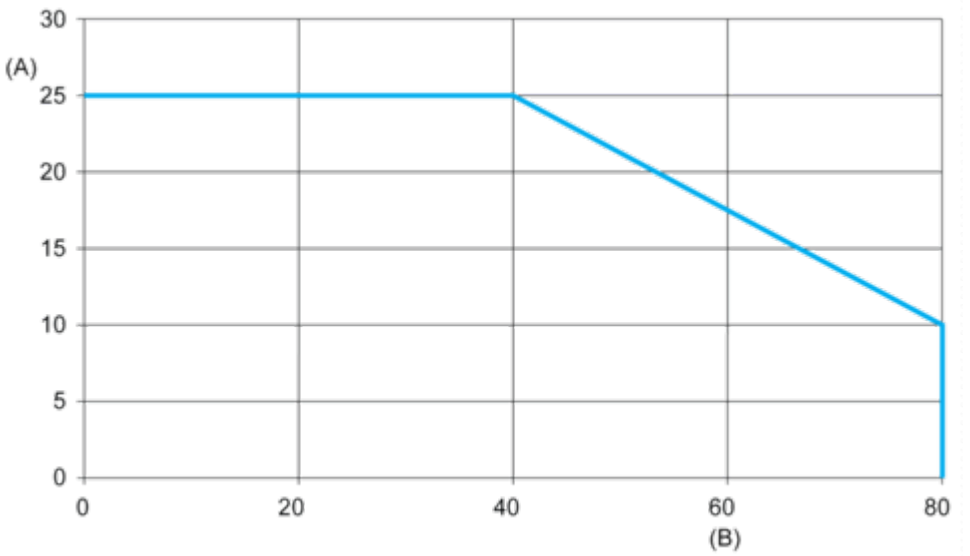

A : Output Current (Arms)
B : Ambient Temperature (°C)