Product datasheet

Specifications

Push button, metal, flush, green, Ø22, spring return, unmarked, 1 NO

XB4BA31

Main

Range Of Product	Harmony XB4
Product Or Component Type	Push-button
Device Short Name	XB4
Bezel Material	Chromium plated metal
Fixing Collar Material	Zamak
Mounting Diameter	22.5 mm
Sale Per Indivisible Quantity	1
Shape Of Signaling Unit Head	Round
Type Of Operator	spring return
Operator Profile	Green flush, unmarked
Head Type	Standard
Contacts Type And Composition	1 NO
Contact Operation	Slow-break
Connections - Terminals	Screw clamp terminals, <= 2 x 1.5 mm² with cable end conforming to IEC 60947-1 Screw clamp terminals, 1 x 0.22...2 x 2.5 mm² without cable end conforming to IEC 60947-1

Complementary

Height	47 mm
Width	30 mm
Depth	52 mm
Terminals Description Iso N°1	(13-14)NO
Net Weight	0.08 kg
Resistance To High Pressure Washer	7000000 Pa at 55 °C, distance : 0.1 m
Contacts Usage	Standard contacts
Positive Opening	Without
Operating Travel	2.6 mm (NO changing electrical state) 4.3 mm (total travel)
Operating Force	3.8 N NO changing electrical state
Mechanical Durability	10000000 cycles
Tightening Torque	0.8…1.2 N.m conforming to IEC 60947-1

Disclaimer: This documentation is not intended as a substitute for and is not to be used for determining suitability or reliability of these products for specific user applications

Shape Of Screw Head	Cross compatible with Philips no 1 screwdriver Cross compatible with pozidriv No 1 screwdriver Slotted compatible with flat Ø 4 mm screwdriver Slotted compatible with flat Ø 5.5 mm screwdriver
Contacts Material	Silver alloy (Ag/Ni)
Short-Circuit Protection	10 A cartridge fuse type gG conforming to IEC 60947-5-1
[Ith] Conventional Free Air Thermal Current	10 A conforming to IEC 60947-5-1
[Ui] Rated Insulation Voltage	600 V (pollution degree 3) conforming to IEC 60947-1
[Uimp] Rated Impulse Withstand Voltage	6 kV conforming to IEC 60947-1
[Ie] Rated Operational Current	3 A at 240 V, AC-15, A600 conforming to IEC 60947-5-1 6 A at 120 V, AC-15, A600 conforming to IEC 60947-5-1 0.1 A at 600 V, DC-13, Q600 conforming to IEC 60947-5-1 0.27 A at 250 V, DC-13, Q600 conforming to IEC 60947-5-1 0.55 A at 125 V, DC-13, Q600 conforming to IEC 60947-5-1 1.2 A at 600 V, AC-15, A600 conforming to IEC 60947-5-1
Electrical Durability	1000000 cycles, AC-15, 2 A at 230 V, operating rate <3600 cyc/h, load factor: 0.5 conforming to IEC 60947-5-1 appendix C 1000000 cycles, AC-15, 3 A at 120 V, operating rate <3600 cyc/h, load factor: 0.5 conforming to IEC 60947-5-1 appendix C 1000000 cycles, AC-15, 4 A at 24 V, operating rate <3600 cyc/h, load factor: 0.5 conforming to IEC 60947-5-1 appendix C 1000000 cycles, DC-13, 0.2 A at 110 V, operating rate <3600 cyc/h, load factor: 0.5 conforming to IEC 60947-5-1 appendix C 1000000 cycles, DC-13, 0.5 A at 24 V, operating rate <3600 cyc/h, load factor: 0.5 conforming to IEC 60947-5-1 appendix C
Electrical Reliability	Λ < 10exp(-6) at 5 V and 1 mA in clean environment conforming to IEC 60947-5-4 Λ < 10exp(-8) at 17 V and 5 mA in clean environment conforming to IEC 60947-5-4
Device Presentation	Complete product

Environment

Protective Treatment	TH
Ambient Air Temperature For Storage	-40…70 °C
Ambient Air Temperature For Operation	-40…70 °C
Overvoltage Category	Class I conforming to IEC 60536
Ip Degree Of Protection	IP66 conforming to IEC 60529 IP67 IP69 IP69K
Nema Degree Of Protection	NEMA 13 NEMA 4X
Ik Degree Of Protection	IK06 conforming to IEC 50102
Standards	JIS C8201-5-1 IEC 60947-5-5 UL 508 IEC 60947-1 IEC 60947-5-4 IEC 60947-5-1 CSA C22.2 No 14 JIS C8201-1
Product Certifications	CSA GL BV UL listed DNV LROS (Lloyds register of shipping)
Vibration Resistance	5 gn (f= 2…500 Hz) conforming to IEC 60068-2-6

Shock Resistance	30 gn (duration = 18 ms) for half sine wave acceleration conforming to IEC 60068-2-27 50 gn (duration = 11 ms) for half sine wave acceleration conforming to IEC 60068-2-27

Packing Units

Unit Type Of Package 1	PCE
Number Of Units In Package 1	1
Package 1 Height	3.500 cm
Package 1 Width	5.500 cm
Package 1 Length	8.500 cm
Package 1 Weight	78.800 g
Unit Type Of Package 2	S03
Number Of Units In Package 2	150
Package 2 Height	30.000 cm
Package 2 Width	30.000 cm
Package 2 Length	40.000 cm
Package 2 Weight	12.257 kg
Unit Type Of Package 3	P06
Number Of Units In Package 3	1200
Package 3 Height	75.000 cm
Package 3 Width	80.000 cm
Package 3 Length	60.000 cm
Package 3 Weight	106.056 kg

Contractual warranty

Warranty	18 months

Sustainability

Green Premium™ label is Schneider Electric's commitment to delivering products with best-in-class environmental performance. Green Premium promises compliance with the latest regulations, transparency on environmental impacts, as well as circular and low-CO_2 products.

Guide to assessing product sustainability is a white paper that clarifies global eco-label standards and how to interpret environmental declarations.

Learn more about Green Premium >

Guide to assess a product's sustainability >

Transparency RoHS/REACh

Well-being performance

Reach Free Of Svhc	
Toxic Heavy Metal Free	
Mercury Free	
Rohs Exemption Information	Yes

Certifications & Standards

Reach Regulation	REACh Declaration
Eu Rohs Directive	Pro-active compliance (Product out of EU RoHS legal scope) EU RoHS Declaration
China Rohs Regulation	China RoHS declaration
Environmental Disclosure	Product Environmental Profile
Weee	The product must be disposed on European Union markets following specific waste collection and never end up in rubbish bins
Circularity Profile	End of Life Information

Dimensions Drawings

Dimensions

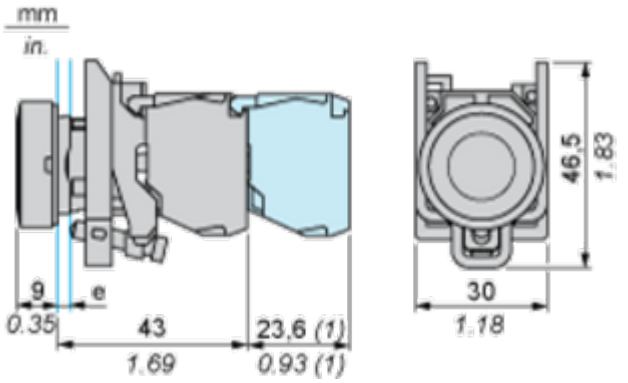

e : clamping thickness: 1 to 6 mm / 0.04 to 0.24 in.
(1) Additional row of contacts or double contact.

Mounting and Clearance

Panel Cut-out for Pushbuttons, Switches and Pilot Lights (Finished Holes, Ready for Installation)

Connection by Screw Clamp Terminals or Plug-in Connectors or on Printed Circuit Board	Connection by Faston Connectors
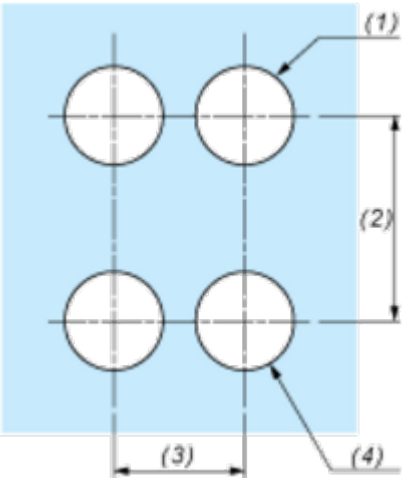	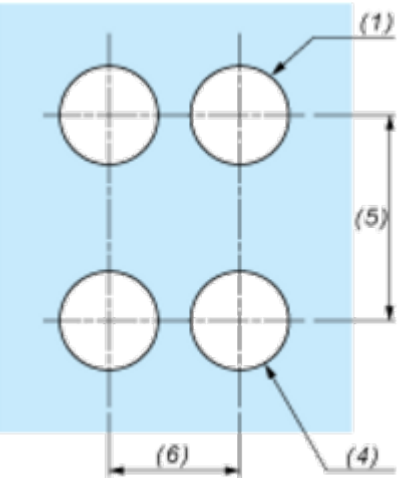

(1) Diameter on finished panel or support
(2) 40 mm min. / 1.57 in. min.
(3) 30 mm min. / 1.18 in. min.
(4) Ø 22.5 mm / 0.89 in. recommended (Ø 22.3 mm $_{0}^{+0.4}$ / 0.88 in. $_{0}^{+0.016}$)
(5) 45 mm min. / 1.78 in. min.
(6) 32 mm min. / 1.26 in. min.