Product datasheet

Specifications

Green Premium™

beacon with buzzer + 1 illuminated unit - Ø 45 mm - 230 V AC

XVMM2RSSB

Discontinued on: 19-Jan-2022

Discontinued

Main

Range Of Product	Harmony XVM
Product Or Component Type	Pre-assembled and pre-cabled beacon
Beacon Or Indicator Bank Unit Type	1 illuminated unit
Component Name	XVM
Light Source	Red super bright LED with BA 15d base steady signalling
Light Block Color	Red
[Us] Rated Supply Voltage	230 V AC
Indicator Bank Base Type	Base with integrated buzzer
Mounting Mode	Vertical

Complementary

Kit Composition	Cover Aluminium support tube Metal bracket Base unit
Mounting Diameter	45 mm
Connections - Terminals	Flying leads,clamping capacity: 1 x 0.325 mm² (AWG 22)
Marking	CE
Mounting Support	Aluminium tube
Short-Circuit Protection	0.2 A
[Ui] Rated Insulation Voltage	250 V conforming to IEC 60947-1
Nominal Voltage Limit	0.85...1.1 Un conforming to IEC 60947-5-1
Current Consumption	18 mA on base unit 20 mA on flash discharge tube unit
[Uimp] Rated Impulse Withstand Voltage	4 kV conforming to IEC 60947-1
Flashing Frequency	0.8 Hz
Fundamental Frequency	4 kHz
Net Weight	0.221 kg

Environment

Ip Degree Of Protection	IP42 vertical position conforming to IEC 60529
Product Certifications	CCC

Disclaimer: This documentation is not intended as a substitute for and is not to be used for determining suitability or reliability of these products for specific user applications

Standards	EN/IEC 60947-1 EN/IEC 60947-5-1
Ambient Air Temperature For Storage	-25…70 °C
Ambient Air Temperature For Operation	-10…50 °C
Overvoltage Category	Class I conforming to IEC 60947-1 Class I conforming to IEC 60947-5-1 Class I conforming to IEC 61140
Protective Treatment	TC
Noise Level	0…80 dB at 1 m

Packing Units

Unit Type Of Package 1	PCE
Number Of Units In Package 1	1
Package 1 Height	5.5 cm
Package 1 Width	8.5 cm
Package 1 Length	54 cm
Package 1 Weight	466 g

Contractual warranty

Warranty	18 months

Sustainability

Green Premium™ label is Schneider Electric's commitment to delivering products with best-in-class environmental performance. Green Premium promises compliance with the latest regulations, transparency on environmental impacts, as well as circular and low-CO_2 products.

Guide to assessing product sustainability is a white paper that clarifies global eco-label standards and how to interpret environmental declarations.

Learn more about Green Premium >

Guide to assess a product's sustainability >

Transparency RoHS/REACh

Well-being performance

Mercury Free

Rohs Exemption Information	Yes

Certifications & Standards

Reach Regulation	REACh Declaration
Eu Rohs Directive	Pro-active compliance (Product out of EU RoHS legal scope)
China Rohs Regulation	China RoHS declaration
Environmental Disclosure	Product Environmental Profile
Weee	The product must be disposed on European Union markets following specific waste collection and never end up in rubbish bins
Circularity Profile	No need of specific recycling operations

Dimensions Drawings

Pre-Assembled and Pre-Cabled Tower Light with Fixing Base for Mounting on Vertical Support (Support Tube + Metal Bracket)

Dimensions

Below drawing shows the maximum configuration of the product. Select the number of stages according to the product characteristics in order to get **b2** dimension.

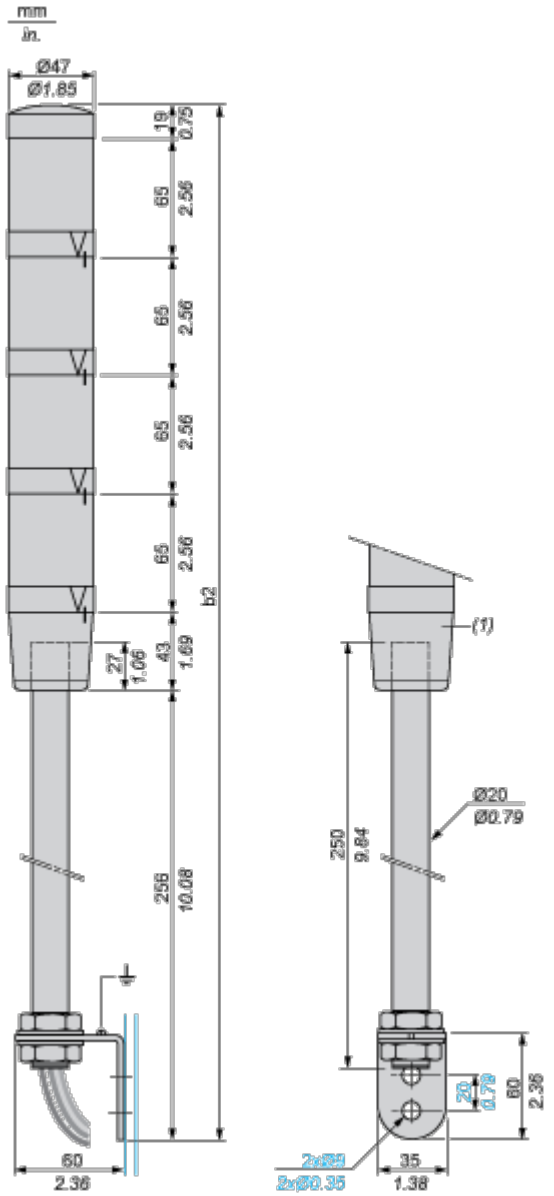

(1) Base unit with or without buzzer.

Number of illuminated units	b2 in mm	b2 in in.
1 unit	383	15.08
2 units	448	17.64
3 units	513	20.20
4 units	578	22.76

Connections and Schema

Pre-Assembled and Pre-Cabled Tower Light

Wire Colors

4th illuminated unit: yellow wire
3rd illuminated unit: green wire
2nd illuminated unit: white wire
1st illuminated unit: blue wire
Common: black wire
Buzzer (if integrated in base unit): grey wire

Technical Description

Base Unit with Integral Buzzer

Adjustment of Audible Signal

View from above:

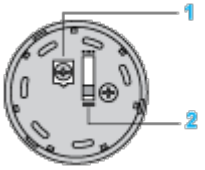

(1) Volume adjustment potentiometer: 0 to 85 dB. Use either a cross headed or flat tipped screwdriver.

(2) 2-position selector for type of audible signal: continuous tone or intermittent tone