Product datasheet

Specifications

variable speed drive - ATV930 - 130kW - 400/480V - w/o braking unit - IP00

ATV930C13N4C

Training Objectives: Compliant

Main

Range Of Product	Altivar Process ATV900
Device Application	Industrial application
Product Or Component Type	Variable speed drive
Product Destination	Synchronous motors Asynchronous motors
Product Specific Application	Process for industrial
Variant	Without braking chopper Standard version
Network Number Of Phases	3 phases
Mounting Mode	Wall mount
Communication Port Protocol	Modbus TCP EtherNet/IP Modbus serial
[Us] Rated Supply Voltage	380...480 V - 15...10 %
Motor Power Kw	132.0 kW for normal duty 110.0 kW for heavy duty
Continuous Output Current	250 A at 2.5 kHz for normal duty 211 A at 2.5 kHz for heavy duty
Emc Filter	Integrated With EMC plate option
Ip Degree Of Protection	IP21
Degree Of Protection	UL type 1
Option Module	Slot A: communication module for Profibus DP V1 Slot A: communication module for PROFINET Slot A: communication module for DeviceNet Slot A: communication module for EtherCAT Slot A: communication module for CANopen daisy chain RJ45 Slot A: communication module for CANopen SUB-D 9 Slot A: communication module for CANopen screw terminals Slot A/slot B/slot C: digital and analog I/O extension module Slot A/slot B/slot C: output relay extension module Slot B: 5/12 V digital encoder interface module Slot B: analog encoder interface module Slot B: resolver encoder interface module communication module for Ethernet Powerlink
Discrete Input Logic	16 preset speeds
Asynchronous Motor Control Profile	Variable torque standard Optimized torque mode Constant torque standard
Synchronous Motor Control Profile	Permanent magnet motor Synchronous reluctance motor
Maximum Output Frequency	599 Hz

Disclaimer: This documentation is not intended as a substitute for and is not to be used for determining suitability or reliability of these products for specific user applications

Switching Frequency	1...8 kHz adjustable 2.5...8 kHz with derating factor
Nominal Switching Frequency	2.5 kHz
Line Current	237.0 A at 380 V (normal duty) 201.0 A at 380 V (heavy duty) 213.0 A at 480 V (normal duty) 165.0 A at 480 V (heavy duty)
Apparent Power	161.4 kVA at 480 V (normal duty) 121.8 kVA at 480 V (heavy duty)
Maximum Transient Current	300 A during 60 s (normal duty) 317 A during 60 s (heavy duty)
Network Frequency	50...60 Hz
Prospective Line Isc	50 kA

Complementary

Discrete Input Number	10
Discrete Input Type	DI1...DI8 programmable, 24 V DC (<= 30 V), impedance: 3.5 kOhm DI7, DI8 programmable as pulse input: 0…30 kHz, 24 V DC (<= 30 V) STOA, STOB safe torque off, 24 V DC (<= 30 V), impedance: > 2.2 kOhm
Discrete Output Number	2
Discrete Output Type	Logic output DQ+ 0…1 kHz <= 30 V DC 100 mA Programmable as pulse output DQ+ 0…30 kHz <= 30 V DC 20 mA Logic output DQ- 0…1 kHz <= 30 V DC 100 mA
Analogue Input Number	3
Analogue Input Type	AI1, AI2, AI3 software-configurable voltage: 0...10 V DC, impedance: 30 kOhm, resolution 12 bits AI1, AI2, AI3 software-configurable current: 0...20 mA/4...20 mA, impedance: 250 Ohm, resolution 12 bits
Analogue Output Number	2
Analogue Output Type	Software-configurable voltage AQ1, AQ2: 0...10 V DC impedance 470 Ohm, resolution 10 bits Software-configurable current AQ1, AQ2: 0...20 mA impedance 500 Ohm, resolution 10 bits
Relay Output Number	3
Relay Output Type	Configurable relay logic R1: fault relay NO/NC electrical durability 100000 cycles Configurable relay logic R2: sequence relay NO electrical durability 1000000 cycles Configurable relay logic R3: sequence relay NO electrical durability 1000000 cycles
Maximum Switching Current	Relay output R1 on resistive load, cos phi = 1: 3 A at 250 V AC Relay output R1 on resistive load, cos phi = 1: 3 A at 30 V DC Relay output R1 on inductive load, cos phi = 0.4 and L/R = 7 ms: 2 A at 250 V AC Relay output R1 on inductive load, cos phi = 0.4 and L/R = 7 ms: 2 A at 30 V DC Relay output R2, R3 on resistive load, cos phi = 1: 5 A at 250 V AC Relay output R2, R3 on resistive load, cos phi = 1: 5 A at 30 V DC Relay output R2, R3 on inductive load, cos phi = 0.4 and L/R = 7 ms: 2 A at 250 V AC Relay output R2, R3 on inductive load, cos phi = 0.4 and L/R = 7 ms: 2 A at 30 V DC
Minimum Switching Current	Relay output R1, R2, R3: 5 mA at 24 V DC
Physical Interface	Ethernet 2-wire RS 485
Connector Type	2 RJ45 1 RJ45
Method Of Access	Slave Modbus TCP
Transmission Rate	10, 100 Mbits 4.8 kbps 9600 bit/s 19200 bit/s

Transmission Frame	RTU
Number Of Addresses	1…247
Data Format	8 bits, configurable odd, even or no parity
Type Of Polarization	No impedance
4 Quadrant Operation Possible	False
Acceleration And Deceleration Ramps	Linear adjustable separately from 0.01...9999 s
Motor Slip Compensation	Adjustable Automatic whatever the load Can be suppressed Not available in permanent magnet motor law
Braking To Standstill	By DC injection
Brake Chopper Integrated	False
Maximum Input Current	237.0 A
Maximum Output Voltage	480.0 V
Relative Symmetric Network Frequency Tolerance	5 %
Base Load Current At High Overload	211.0 A
Base Load Current At Low Overload	250.0 A
Power Dissipation In W	Forced convection: 2999 W at 380 V, switching frequency 2.5 kHz Natural convection: 358 W at 380 V, switching frequency 2.5 kHz
With Safety Function Safely Limited Speed (Sls)	True
With Safety Function Safe Brake Management (Sbc/Sbt)	True
With Safety Function Safe Operating Stop (Sos)	False
With Safety Function Safe Position (Sp)	False
With Safety Function Safe Programmable Logic	False
With Safety Function Safe Speed Monitor (Ssm)	False
With Safety Function Safe Stop 1 (Ss1)	True
With Sft Fct Safe Stop 2 (Ss2)	False
With Safety Function Safe Torque Off (Sto)	True
With Safety Function Safely Limited Position (Slp)	False
With Safety Function Safe Direction (Sdi)	False
Protection Type	Thermal protection: motor Safe torque off: motor Motor phase break: motor Thermal protection: drive Safe torque off: drive Overheating: drive Overcurrent between output phases and earth: drive Overload of output voltage: drive Short-circuit protection: drive Motor phase break: drive Overvoltages on the DC bus: drive Line supply overvoltage: drive Line supply undervoltage: drive Line supply phase loss: drive Overspeed: drive Break on the control circuit: drive
Quantity Per Set	1
Width	320 mm

Height	852 mm
Depth	393 mm
Net Weight	82 kg
Electrical Connection	Control: screw terminal 0.5...1.5 mm²/AWG 20...AWG 16 Line side: screw terminal 2 x 70...3 x 120 mm²/AWG 2/0...300 kcmil Motor: screw terminal 2 x 70...3 x 120 mm²/AWG 2/0...300 kcmil DC bus: screw terminal 2 x 95...3 x 120 mm²/AWG 2/0...300 kcmil
Transmission Rate	10/100 Mbit/s for Ethernet IP/Modbus TCP 4.8, 9.6, 19.2, 38.4 kbit/s for Modbus serial
Exchange Mode	Half duplex, full duplex, autonegotiation Ethernet IP/Modbus TCP
Data Format	8 bits, configurable odd, even or no parity for Modbus serial
Type Of Polarization	No impedance for Modbus serial
Number Of Addresses	1…247 for Modbus serial
Supply	External supply for digital inputs: 24 V DC (19…30 V), <1.25 mA, protection type: overload and short-circuit protection Internal supply for reference potentiometer (1 to 10 kOhm): 10.5 V DC +/- 5 %, <10 mA, protection type: overload and short-circuit protection Internal supply for digital inputs and STO: 24 V DC (21…27 V), <200 mA, protection type: overload and short-circuit protection
Local Signalling	Local diagnostic: 3 LED (mono/dual colour) Embedded communication status: 5 LED (dual colour) Communication module status: 2 LED (dual colour) Presence of voltage: 1 LED (red)
Input Compatibility	DI1...DI8: discrete input level 1 PLC conforming to IEC 61131-2 DI7, DI8: pulse input level 1 PLC conforming to IEC 65A-68 STOA, STOB: discrete input level 1 PLC conforming to IEC 61131-2
Discrete Input Logic	Positive logic (source) (DI1...DI8), < 5 V (state 0), > 11 V (state 1) Negative logic (sink) (DI1...DI8), > 16 V (state 0), < 10 V (state 1) Positive logic (source) (DI7, DI8), < 0.6 V (state 0), > 2.5 V (state 1) Positive logic (source) (STOA, STOB), < 5 V (state 0), > 11 V (state 1)
Sampling Duration	2 ms +/- 0.5 ms (DI1...DI8) - discrete input 5 ms +/- 1 ms (DI7, DI8) - pulse input 1 ms +/- 1 ms (AI1, AI2, AI3) - analog input 5 ms +/- 1 ms (AQ1, AQ2) - analog output
Accuracy	+/- 0.6 % AI1, AI2, AI3 for a temperature variation 60 °C analog input +/- 1 % AQ1, AQ2 for a temperature variation 60 °C analog output
Linearity Error	AI1, AI2, AI3: +/- 0.15 % of maximum value for analog input AQ1, AQ2: +/- 0.2 % for analog output
Refresh Time	Relay output (R1, R2, R3): 5 ms (+/- 0.5 ms)
Isolation	Between power and control terminals

Environment

Operating Altitude	<= 1000 m without derating 1000...4800 m with current derating 1 % per 100 m
Operating Position	Vertical +/- 10 degree
Product Certifications	CSA TÜV UL
Marking	CE
Standards	UL 508C IEC 61800-3 IEC 61800-5-1 IEC 61000-3-12 IEC 60721-3 IEC 61508 IEC 13849-1

Maximum Thdi	<48 % full load conforming to IEC 61000-3-12
Assembly Style	Enclosed
Electromagnetic Compatibility	Electrostatic discharge immunity test level 3 conforming to IEC 61000-4-2 Radiated radio-frequency electromagnetic field immunity test level 3 conforming to IEC 61000-4-3 Electrical fast transient/burst immunity test level 4 conforming to IEC 61000-4-4 1.2/50 µs - 8/20 µs surge immunity test level 3 conforming to IEC 61000-4-5 Conducted radio-frequency immunity test level 3 conforming to IEC 61000-4-6
Environmental Class (During Operation)	Class 3C3 according to IEC 60721-3-3 Class 3S3 according to IEC 60721-3-3
Maximum Acceleration Under Shock Impact (During Operation)	150 m/s² at 11 ms
Maximum Acceleration Under Vibrational Stress (During Operation)	10 m/s² at 13...200 Hz
Maximum Deflection Under Vibratory Load (During Operation)	1.5 mm at 2...13 Hz
Permitted Relative Humidity (During Operation)	Class 3K5 according to EN 60721-3
Volume Of Cooling Air	600 m3/h
Overvoltage Category	III
Regulation Loop	Adjustable PID regulator
Insulation Resistance	> 1 MOhm 500 V DC for 1 minute to earth
Noise Level	69.9 dB conforming to 86/188/EEC
Vibration Resistance	1.5 mm peak to peak (f= 2…13 Hz) conforming to IEC 60068-2-6 1 gn (f= 13…200 Hz) conforming to IEC 60068-2-6
Shock Resistance	15 gn for 11 ms conforming to IEC 60068-2-27
Environmental Characteristic	Chemical pollution resistance class 3C3 conforming to IEC 60721-3-3 Dust pollution resistance class 3S3 conforming to IEC 60721-3-3
Relative Humidity	5…95 % without condensation conforming to IEC 60068-2-3
Ambient Air Temperature For Operation	-15…50 °C (without derating) 50…60 °C (with derating factor)
Noise Level	69.9 dB
Pollution Degree	2
Ambient Air Transport Temperature	-40…70 °C
Ambient Air Temperature For Storage	-40…70 °C

Packing Units

Unit Type Of Package 1	PCE
Number Of Units In Package 1	1
Package 1 Height	66 cm
Package 1 Width	48 cm
Package 1 Length	103 cm
Package 1 Weight	89.6 kg

Sustainability

Green Premium™ label is Schneider Electric's commitment to delivering products with best-in-class environmental performance. Green Premium promises compliance with the latest regulations, transparency on environmental impacts, as well as circular and low-CO_2 products.

Guide to assessing product sustainability is a white paper that clarifies global eco-label standards and how to interpret environmental declarations.

Learn more about Green Premium >

Guide to assess a product's sustainability >

Transparency RoHS/REACh

Resource performance

Upgraded Components Available

Well-being performance

Mercury Free

Rohs Exemption Information Yes

Certifications & Standards

Reach Regulation	REACh Declaration
Eu Rohs Directive	Pro-active compliance (Product out of EU RoHS legal scope)
China Rohs Regulation	China RoHS declaration
Environmental Disclosure	Product Environmental Profile
Weee	The product must be disposed on European Union markets following specific waste collection and never end up in rubbish bins
Circularity Profile	End of Life Information

Dimensions Drawings

Dimensions

Right and Front View

mm
in.

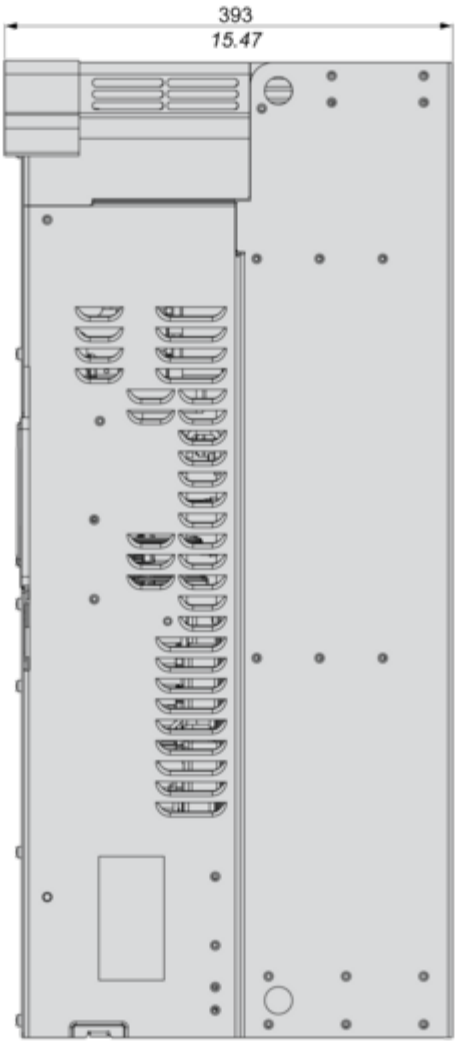

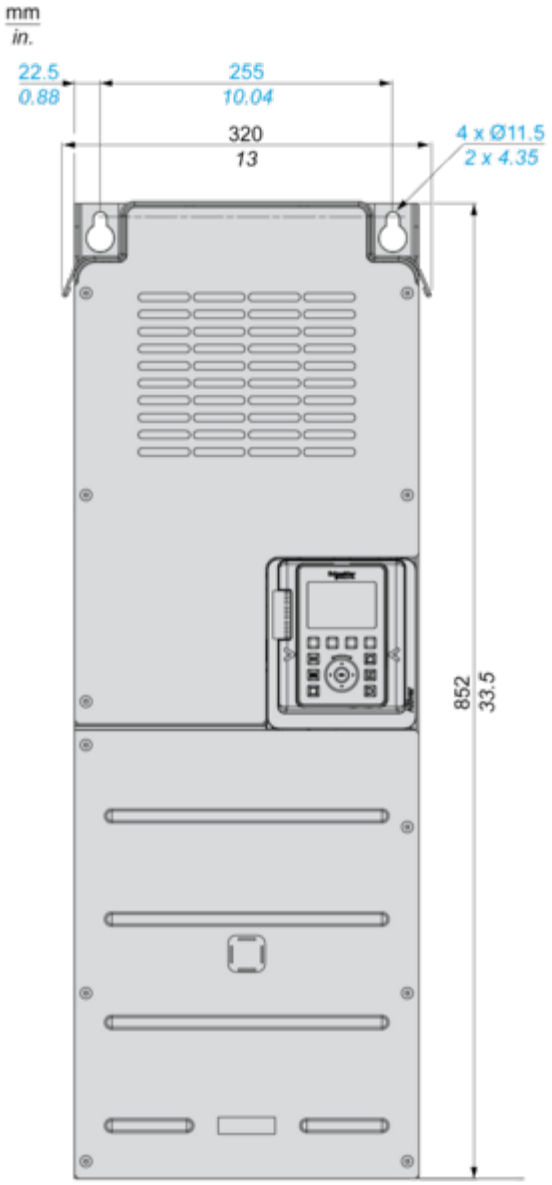

Drives with Lower Conduit Box Sold Separately

Rear, Front and Left View

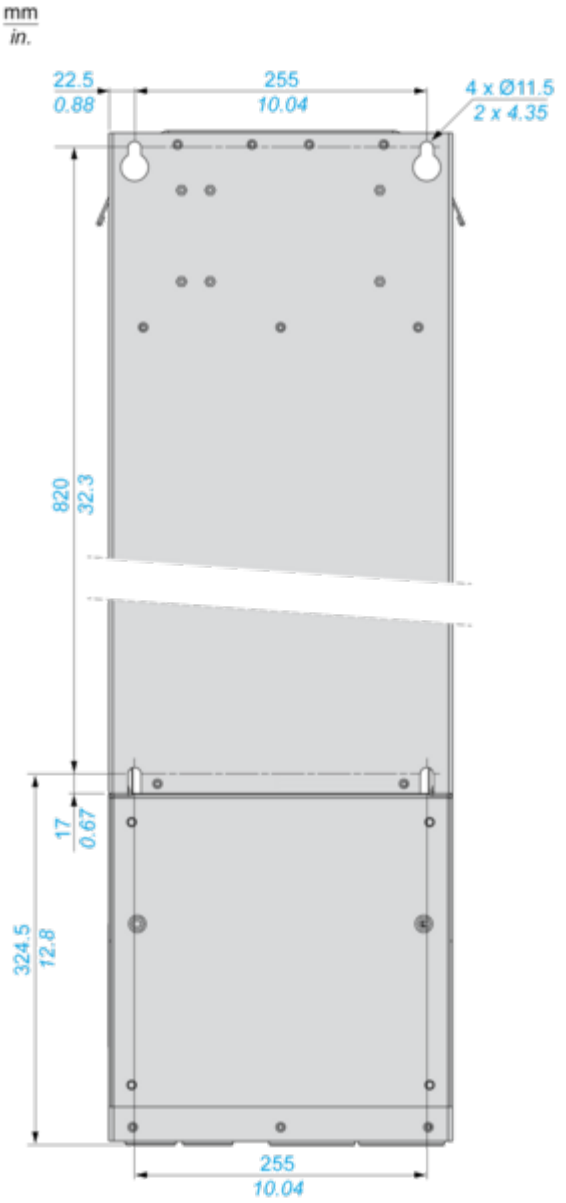
mm
in.
22.5
0.88
255
10.04
4 x Ø11.5
2 x 4.35
820
32.3
17
0.67
324.5
12.8
255
10.04

mm
in.

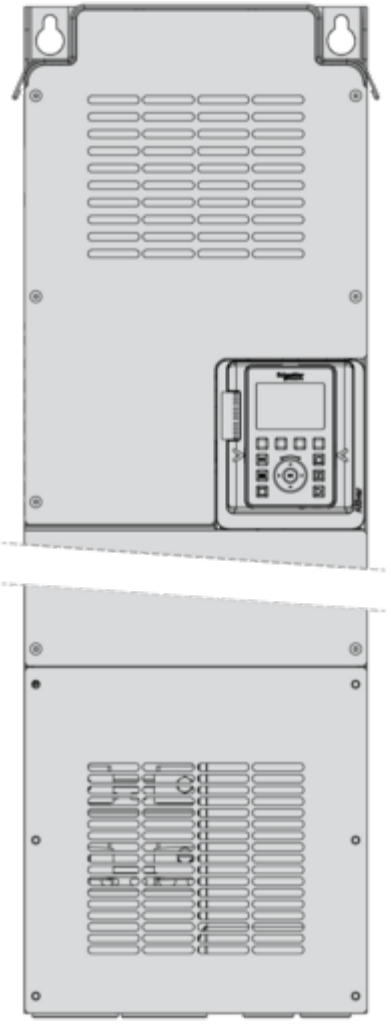

mm
in.

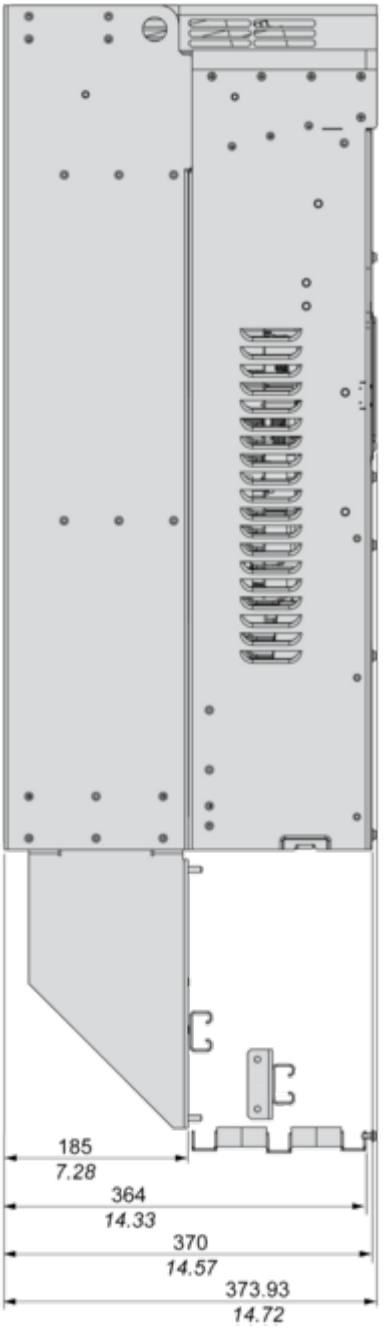

Mounting and Clearance

Clearances

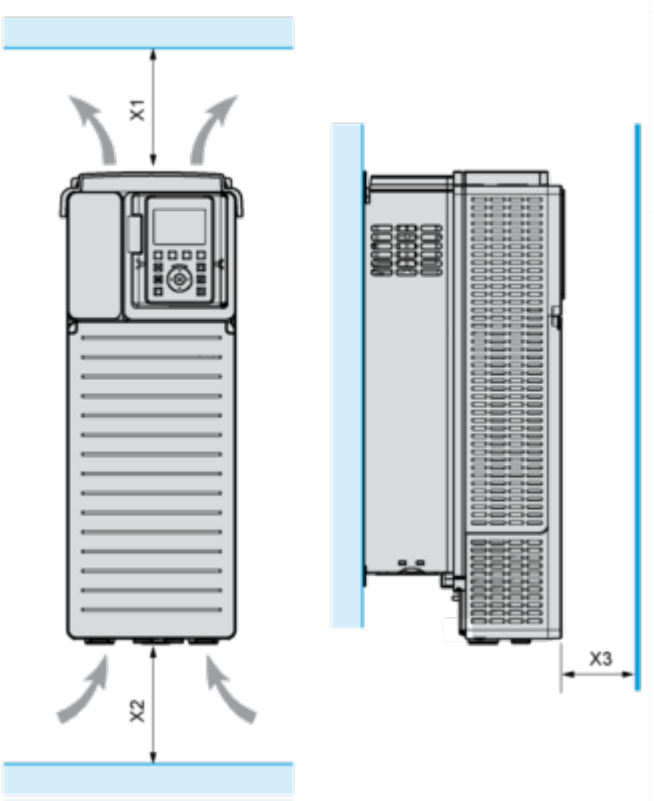

X1	X2	X3
≥ 250 mm (10 in.)	≥ 250 mm (10 in.)	≥ 100 mm (3.94 in.)

- Mount the device in a vertical position (±10°). This is required for cooling the device.
- Do not mount the device close to heat sources.
- Leave sufficient free space so that the air required for cooling purposes can circulate from the bottom to the top of the drive.

Mounting Types

Mounting Type A: Individual IP21

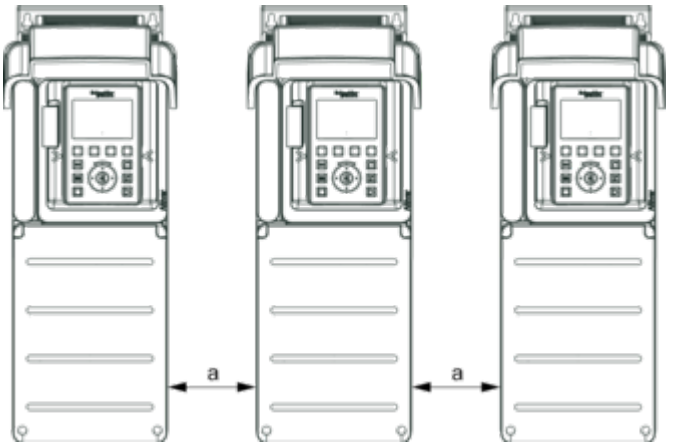

a ≥ = 110 mm (4.33 in.)

Mounting Type B: Side by Side IP20 , Only possible at ambient temperature lower than 40 °C (104 °F)

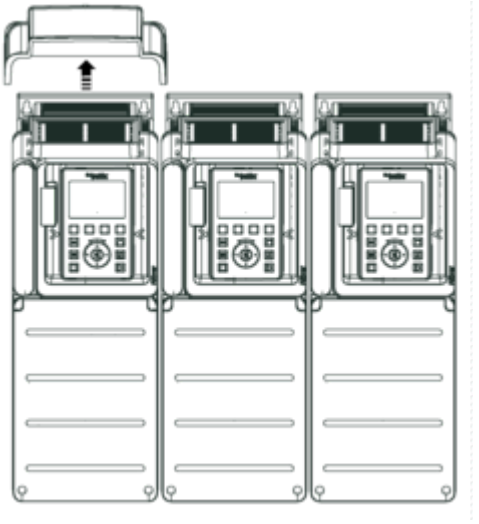

Mounting Type C: Individual IP20

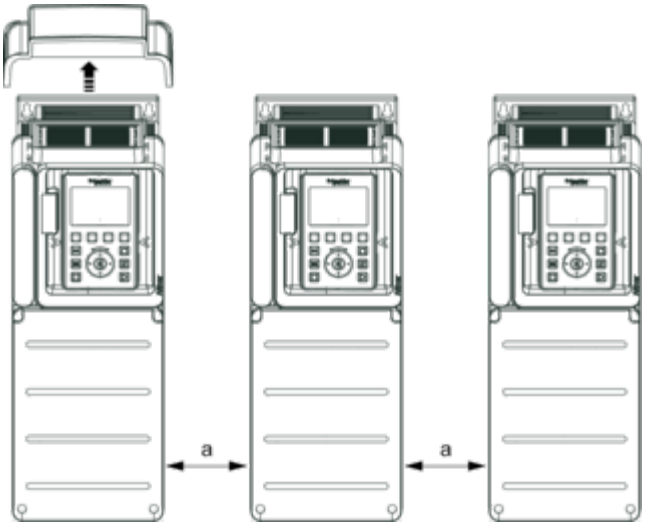

a ≥ = 110 mm (4.33 in.)

Connections and Schema

Three-Phase Power Supply with Upstream Breaking via Line Contactor

Connection diagrams conforming to standards EN 954-1 category 1 and IEC/EN 61508 capacity SIL1, stopping category 0 in accordance with standard IEC/EN 60204-1

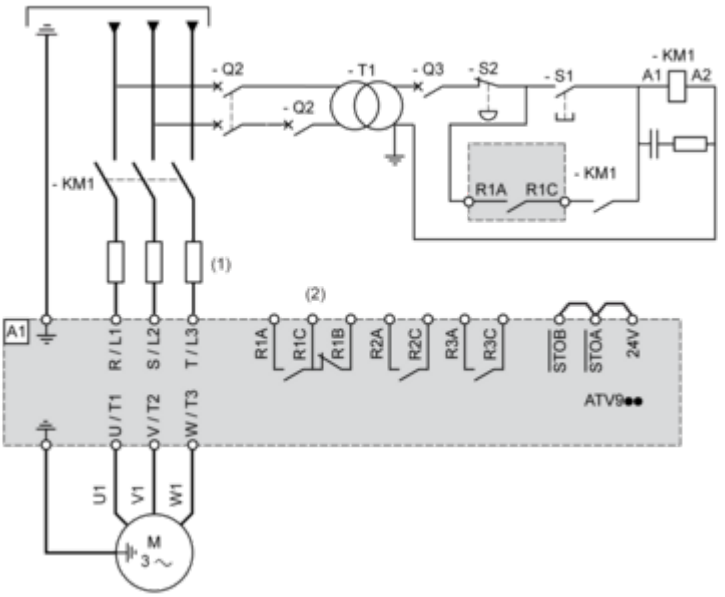

(1) Line choke if used
(2) Use relay R1 set to operating state Fault to switch Off the product once an error is detected.
A1 : Drive
KM1 : Line Contactor
Q2, Q3 : Circuit breakers
S1, S2 : Pushbuttons
T1 : Transformer for control part

Three-Phase Power Supply with Downstream Breaking via Contactor

Connection diagrams conforming to standards EN 954-1 category 1 and IEC/EN 61508 capacity SIL1, stopping category 0 in accordance with standard IEC/EN 60204-1

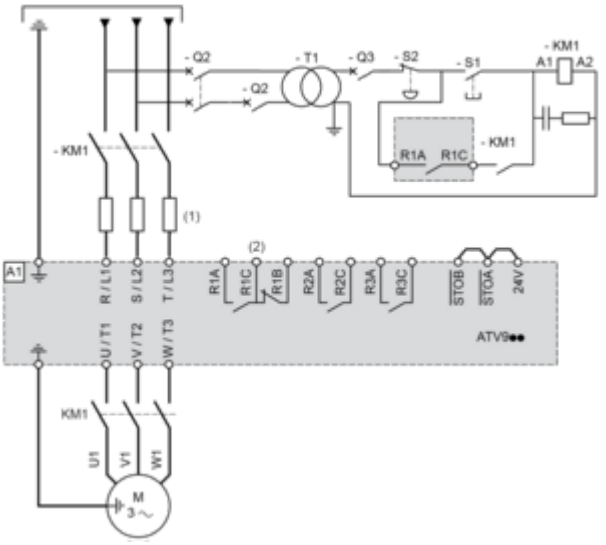

(1) Line choke if used
(2) Use relay R1 set to operating state Fault to switch Off the product once an error is detected.
A1 : Drive
KM1 : Contactor

Control Block Wiring Diagram

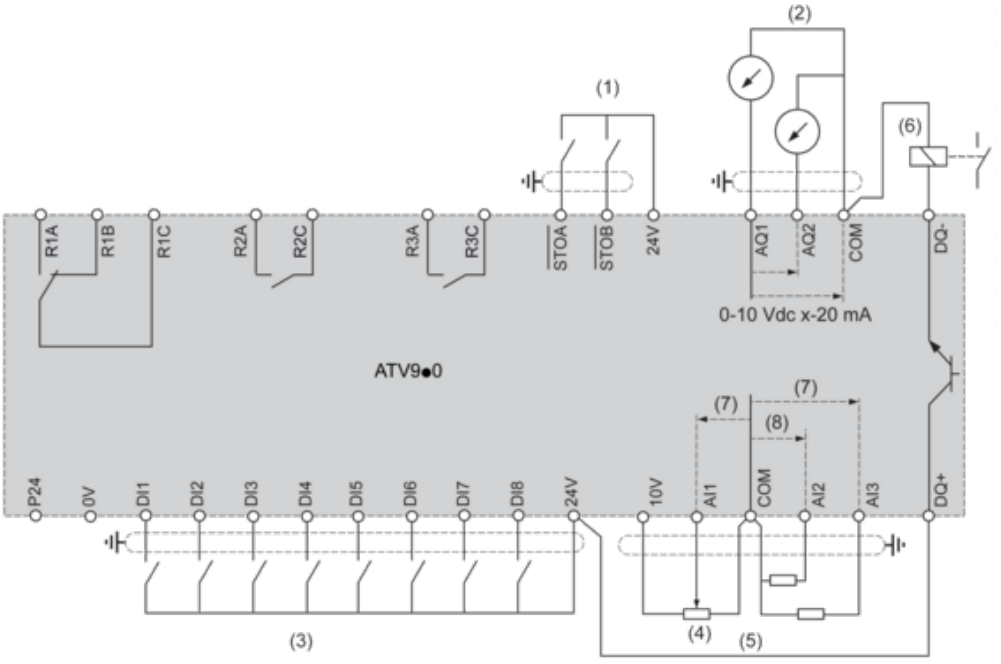

(1) Safe Torque Off
(2) Analog Output
(3) Digital Input
(4) Reference potentiometer
(5) Analog Input
(6) Digital Output
(7) 0-10 Vdc, x-20 mA
(8) 0-10 Vdc, -10 Vdc...+10 Vdc
R1A, R1B, R1C : Fault relay
R2A, R2C : Sequence relay
R3A, R3C : Sequence relay

Sensor Connection

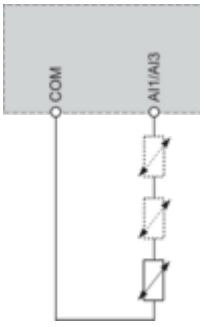

It is possible to connect either 1 or 3 sensors on terminals AI1 or AI3

Sink / Source Switch Configuration

The switch is used to adapt the operation of the logic inputs to the technology of the programmable controller outputs.

- Set the switch to Source (factory setting) if using PLC outputs with PNP transistors.
- Set the switch to Ext if using PLC outputs with NPN transistors.

Switch Set to SRC (Source) Position Using the Output Power Supply for the Digital Inputs

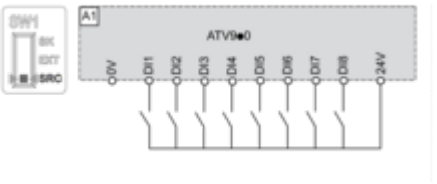

Switch Set to SRC (Source) Position and Use of an External Power Supply for the DIs

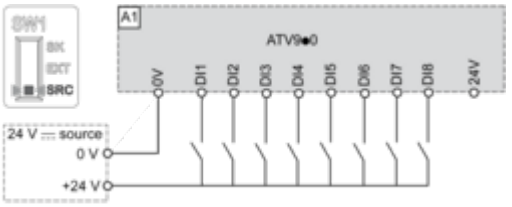

Switch Set to SK (Sink) Position Using the Output Power Supply for the Digital Inputs

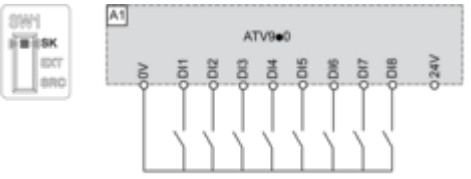

Switch Set to EXT Position Using an External Power Supply for the DIs

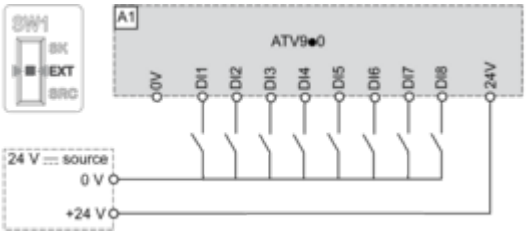

Performance Curves

Derating Curves

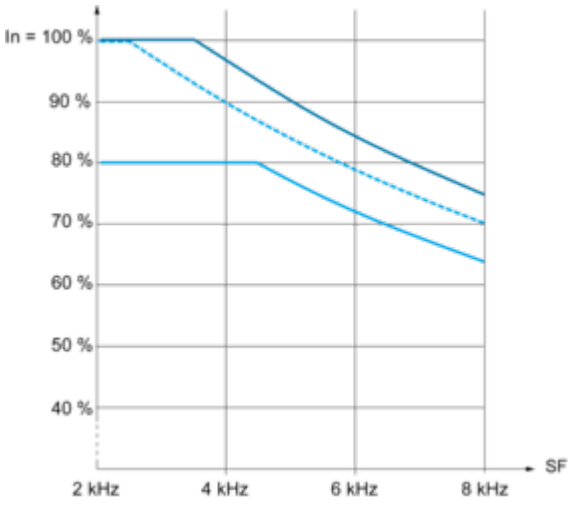

40 °C (104 °F) - Mounting type A, B and C
50 °C (122 °F) - Mounting type A and C
60 °C (140 °F) - Mounting type C

In : Nominal Drive Current
SF : Switching Frequency