Product datasheet

Specifications

Green Premium™

servo motor BCH, Lexium 28, 180mm, 3000W, without oil seal, smooth, brake, straight connection

BCH2MR3020CF6C

Discontinued on: 1 Nov 2020

Discontinued

Main

Range Compatibility	Lexium 28
Product Or Component Type	Servo motor
Device Short Name	BCH2

Complementary

Maximum Mechanical Speed	3000 rpm
[Us] Rated Supply Voltage	220 V
Network Number Of Phases	Three phase
Continuous Stall Current	16.33 A
Continuous Stall Torque	14.32 N.m for LXM28... at 19.8 A, 220 V, three phase
Continuous Power	3000 W
Peak Stall Torque	42.97 N.m for LXM28... at 19.8 A, 220 V, three phase
Nominal Output Power	3000 W for LXM28... at 19.8 A, 220 V, three phase
Nominal Torque	14.32 N.m for LXM28... at 19.8 A, 220 V, three phase
Nominal Speed	2000 rpm for LXM28... at 19.8 A, 220 V, three phase
Maximum Current Irms	53.9 A for LXM28... at 3 kW, 220 V
Maximum Permanent Current	18.8 A
Product Compatibility	LXM28... servo drive motor at 3 kW, 220 V, three phase
Shaft End	Smooth shaft
Shaft Diameter	35 mm
Shaft Length	79 mm
Feedback Type	20 bits single turn absolute encoder
Holding Brake	With
Holding Torque	48 N.m built-in
Mounting Support	Asian standard flange
Motor Flange Size	180 mm
Electrical Connection	Connector MIL
Torque Constant	0.88 N.m/A at 20 °C
Back Emf Constant	53 V/krpm at 20 °C
Rotor Inertia	54.1 kg.cm²

Disclaimer: This documentation is not intended as a substitute for and is not to be used for determining suitability or reliability of these products for specific user applications

Stator Resistance	0.131 Ohm at 20 °C
Stator Inductance	2.7 mH at 20 °C
Stator Electrical Time Constant	20.61 ms at 20 °C
Maximum Radial Force Fr	1200 N at 2000 rpm
Maximum Axial Force Fa	497 N
Brake Pull-In Power	49.6 W
Type Of Cooling	Natural convection
Length	235 mm
Number Of Motor Stacks	2
Centring Collar Diameter	114.3 mm
Centring Collar Depth	4 mm
Number Of Mounting Holes	4
Mounting Holes Diameter	13.5 mm
Circle Diameter Of The Mounting Holes	200 mm
Distance Shaft Shoulder-Flange	4 mm
Net Weight	23 kg

Environment

Ip Degree Of Protection	IP54 IM B5, IM V1 IP50 IM V3
Ambient Air Temperature For Operation	0…40 °C

Packing Units

Unit Type Of Package 1	PCE
Number Of Units In Package 1	1
Package 1 Height	24.5 cm
Package 1 Width	29.0 cm
Package 1 Length	58.5 cm
Package 1 Weight	24.63 kg

Sustainability

Green Premium™ label is Schneider Electric's commitment to delivering products with best-in-class environmental performance. Green Premium promises compliance with the latest regulations, transparency on environmental impacts, as well as circular and low-CO_2 products.

Guide to assessing product sustainability is a white paper that clarifies global eco-label standards and how to interpret environmental declarations.

Learn more about Green Premium >

Guide to assess a product's sustainability >

Transparency RoHS/REACh

Well-being performance

Reach Free Of Svhc	
Mercury Free	
Rohs Exemption Information	Yes

Certifications & Standards

Reach Regulation	REACh Declaration
Eu Rohs Directive	Pro-active compliance (Product out of EU RoHS legal scope)
China Rohs Regulation	China RoHS declaration
Environmental Disclosure	Product Environmental Profile
Weee	The product must be disposed on European Union markets following specific waste collection and never end up in rubbish bins
Circularity Profile	End of Life Information

Dimensions Drawings

Dimensions

Dimensions of Motor

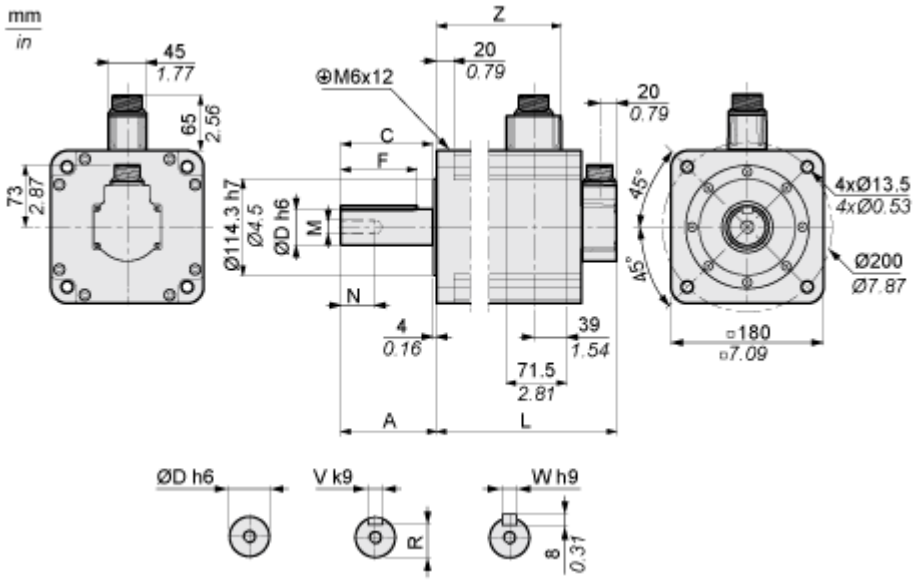

	mm	in.
L (without holding brake)	202	7.95
L (with holding brake)	235	9.25
A	79	3.11
C	73	2.87
D	35	1.38
F	63	2.48
N	28	1.10
M	M12	
R	30	1.18
V	10	0.39
W	10	0.39
Z	136	5.35

Performance Curves

Torque/Speed Curves with 230 V Three Phase Supply Voltage

Servo Motor with LXM28AU30••• Servo Drive

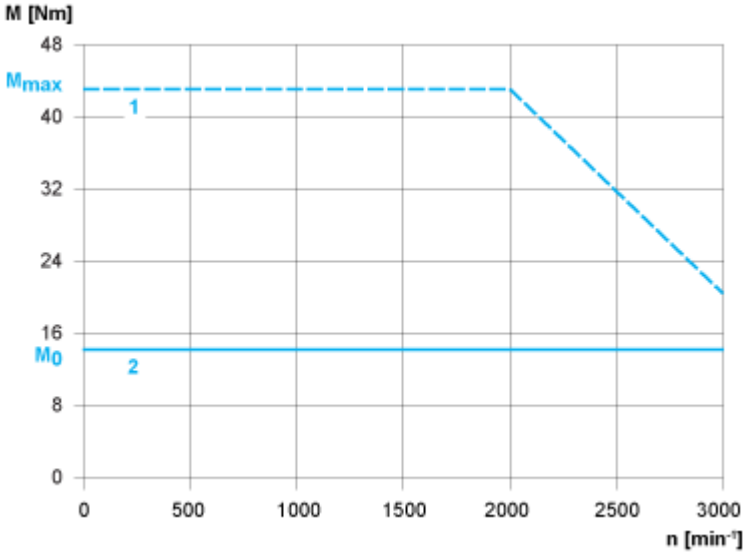

1 : Peak torque

2 : Continuous torque