Product datasheet

Specifications

Green Premium™

socket RUZ- separate contact -12 A - < 250 V - connector

RUZSF3M

Main

Range Of Product	Harmony Electromechanical Relays
Device Short Name	RUZ
Product Or Component Type	Socket
Product Compatibility	Plug-in relay RUM with 2 C/O contact Plug-in relay RUM with 3 C/O contact
Contacts Type And Composition	3 C/O
[Ith] Conventional Free Air Thermal Current	16 A
[Ue] Rated Operational Voltage	< 250 V

Complementary

Shape Of Pin	Flat
Contact Terminal Arrangement	Separate
Connections - Terminals	Connector, 1 x 0.25...1 x 2.5 mm² (AWG 22...AWG 14) flexible with cable end Connector, 2 x 0.25...2 x 1 mm² (AWG 22...AWG 17) flexible with cable end Connector, 1 x 0.5...1 x 2.5 mm² (AWG 20...AWG 14) solid without cable end Connector, 2 x 0.5...2 x 1.5 mm² (AWG 20...AWG 16) solid without cable end
Tightening Torque	< 1 N.m for M3.5 screw(s)
Fixing Mode	By screw (panel) Clip-on (35 mm symmetrical DIN rail)
[Uimp] Rated Impulse Withstand Voltage	4 kV
Overvoltage Category	III
Pollution Degree	3
Sale Per Indivisible Quantity	10
Width	36 mm
Net Weight	0.095 kg

Environment

Ip Degree Of Protection	IP20 conforming to IEC 60529
Standards	IEC 61984
Product Certifications	CSA UL
Marking	CE
Ambient Air Temperature For Storage	-40…85 °C
Ambient Air Temperature For Operation	-40…55 °C

Disclaimer: This documentation is not intended as a substitute for and is not to be used for determining suitability or reliability of these products for specific user applications

Packing Units

Unit Type Of Package 1	PCE
Number Of Units In Package 1	1
Package 1 Height	3.5 cm
Package 1 Width	9.2 cm
Package 1 Length	6.3 cm
Package 1 Weight	103.0 g
Unit Type Of Package 2	BB1
Number Of Units In Package 2	10
Package 2 Height	10.4 cm
Package 2 Width	11.2 cm
Package 2 Length	18.7 cm
Package 2 Weight	1.05 kg
Unit Type Of Package 3	CAR
Number Of Units In Package 3	80
Package 3 Height	28.5 cm
Package 3 Width	29.9 cm
Package 3 Length	39.8 cm
Package 3 Weight	8.4 kg

Contractual warranty

Warranty	18 months

Sustainability

Green Premium™ label is Schneider Electric's commitment to delivering products with best-in-class environmental performance. Green Premium promises compliance with the latest regulations, transparency on environmental impacts, as well as circular and low-CO_2 products.

Guide to assessing product sustainability is a white paper that clarifies global eco-label standards and how to interpret environmental declarations.

Learn more about Green Premium >

Guide to assess a product's sustainability >

Transparency RoHS/REACh

Well-being performance

Reach Free Of Svhc	
Toxic Heavy Metal Free	
Mercury Free	
Rohs Exemption Information	Yes

Certifications & Standards

Reach Regulation	REACh Declaration
Eu Rohs Directive	Pro-active compliance (Product out of EU RoHS legal scope) EU RoHS Declaration
China Rohs Regulation	China RoHS declaration
Environmental Disclosure	Product Environmental Profile
Weee	The product must be disposed on European Union markets following specific waste collection and never end up in rubbish bins
Circularity Profile	No need of specific recycling operations

Dimensions Drawings

Dimensions

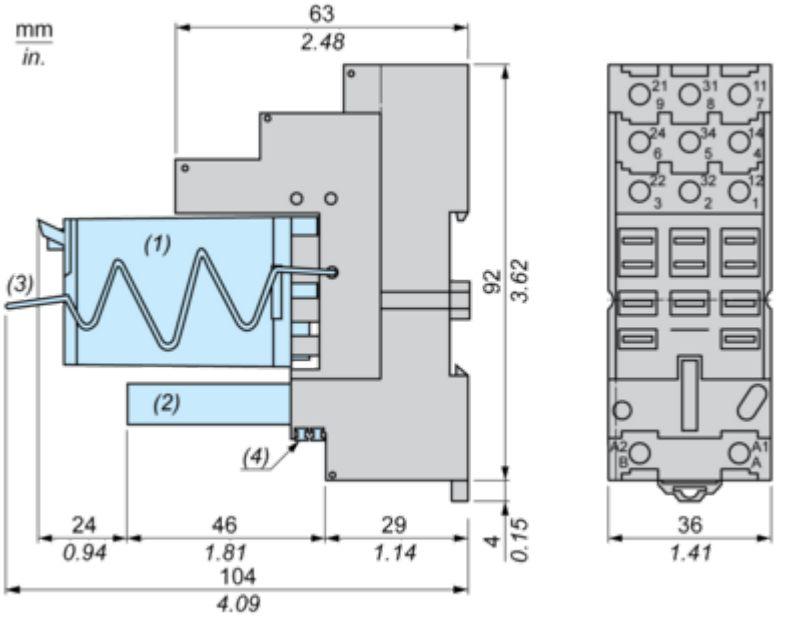

(1) Relays
(2) Protection module
(3) Maintaining clamp
(4) 2 bus jumpers

Connections and Schema

Wiring Diagram

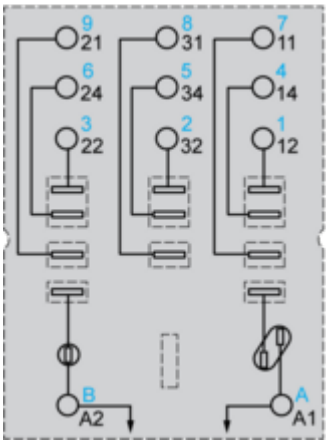

Symbols shown in blue correspond to Nema marking.

Bus Jumpers Mounting on Sockets with Separate Contacts

Example of RUZS2 bus jumper mounting on sockets (view from below)

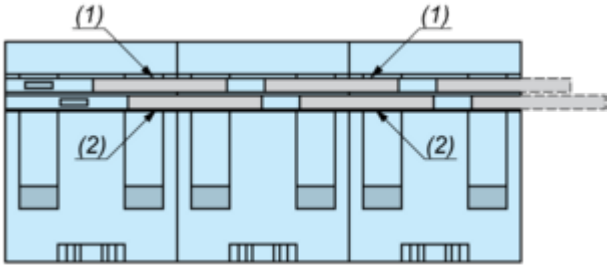

(1) 2 bus jumpers (polarity A2)
(2) 2 bus jumpers (polarity A1)