Product datasheet

Specifications

Green Premium™

FLUSH MOUNTED RED FLUSH CAPS ILLUM PUSHBUTTON WITH LED 120vAC 1NO 1NC SCREW

XB5FW34G5

Discontinued

Discontinued on: 22 Jul 2020

Main

Range Of Product	Harmony XB5
Product Or Component Type	Illuminated push-button
Device Short Name	XB5F
Bezel Material	Dark grey plastic
Fixing Collar Material	Plastic
Head Type	Built-in-flush
Mounting Diameter	30.5 mm
Sale Per Indivisible Quantity	1
Shape Of Signaling Unit Head	Round
Type Of Operator	spring return
Operator Profile	Red flush, unmarked
Operator Additional Information	With plain lens
Contacts Type And Composition	1 NO + 1 NC
Contact Operation	Slow-break
Connections - Terminals	Screw clamp terminals, <= 2 x 1.5 mm² with cable end conforming to IEC 60947-1 Screw clamp terminals, 1 x 0.22...2 x 2.5 mm² without cable end conforming to IEC 60947-1
Light Source	Universal LED
Bulb Base	Integral LED
[Us] Rated Supply Voltage	110...120 V AC 50/60 Hz
Cap/Operator Or Lens Colour	Red

Complementary

Height	42 mm
Width	36.6 mm
Depth	55 mm
Terminals Description Iso N°1	(21-22)NC (13-14)NO
Resistance To High Pressure Washer	7000000 Pa at 55 °C, distance : 0.1 m
Contacts Usage	Standard contacts
Positive Opening	With conforming to IEC 60947-5-1 appendix K

Disclaimer: This documentation is not intended as a substitute for and is not to be used for determining suitability or reliability of these products for specific user applications

Operating Travel	1.5 mm (NC changing electrical state) 2.6 mm (NO changing electrical state) 4.3 mm (total travel)
Operating Force	3.5 N NC changing electrical state 3.8 N
Mechanical Durability	10000000 cycles
Tightening Torque	0.8…1.2 N.m conforming to IEC 60947-1
Shape Of Screw Head	Cross compatible with Philips no 1 screwdriver Cross compatible with pozidriv No 1 screwdriver Slotted compatible with flat Ø 4 mm screwdriver Slotted compatible with flat Ø 5.5 mm screwdriver
Contacts Material	Silver alloy (Ag/Ni)
Short-Circuit Protection	10 A cartridge fuse type gG conforming to IEC 60947-5-1
[Ith] Conventional Free Air Thermal Current	10 A conforming to IEC 60947-5-1
[Ui] Rated Insulation Voltage	600 V (pollution degree 3) conforming to IEC 60947-1
[Uimp] Rated Impulse Withstand Voltage	6 kV conforming to IEC 60947-1
[Ie] Rated Operational Current	3 A at 240 V, AC-15, A600 conforming to IEC 60947-5-1 6 A at 120 V, AC-15, A600 conforming to IEC 60947-5-1 0.1 A at 600 V, DC-13, Q600 conforming to IEC 60947-5-1 0.27 A at 250 V, DC-13, Q600 conforming to IEC 60947-5-1 0.55 A at 125 V, DC-13, Q600 conforming to IEC 60947-5-1 1.2 A at 600 V, AC-15, A600 conforming to IEC 60947-5-1
Electrical Durability	1000000 cycles, AC-15, 2 A at 230 V, operating rate <3600 cyc/h, load factor: 0.5 conforming to IEC 60947-5-1 appendix C 1000000 cycles, AC-15, 3 A at 120 V, operating rate <3600 cyc/h, load factor: 0.5 conforming to IEC 60947-5-1 appendix C 1000000 cycles, AC-15, 4 A at 24 V, operating rate <3600 cyc/h, load factor: 0.5 conforming to IEC 60947-5-1 appendix C 1000000 cycles, DC-13, 0.2 A at 110 V, operating rate <3600 cyc/h, load factor: 0.5 conforming to IEC 60947-5-1 appendix C 1000000 cycles, DC-13, 0.5 A at 24 V, operating rate <3600 cyc/h, load factor: 0.5 conforming to IEC 60947-5-1 appendix C
Electrical Reliability	Λ < 10exp(-6) at 5 V, 1 mA in clean environment conforming to IEC 60947-5-4 Λ < 10exp(-8) at 17 V, 5 mA in clean environment conforming to IEC 60947-5-4
Signalling Type	Steady
Supply Voltage Limits	100…132 V AC
Current Consumption	14 mA
Service Life	100000 h at rated voltage and 25 °C
Surge Withstand	1 kV conforming to IEC 61000-4-5
Device Presentation	Complete product

Environment

Protective Treatment	TH
Ambient Air Temperature For Storage	-40…70 °C
Ambient Air Temperature For Operation	-40…70 °C
Overvoltage Category	Class II conforming to IEC 60536
Ip Degree Of Protection	IP66 conforming to IEC 60529 IP67 IP69 IP69K
Nema Degree Of Protection	NEMA 13 NEMA 4X
Ik Degree Of Protection	IK03 conforming to IEC 50102

Standards	IEC 60947-1 UL 508 JIS C8201-5-1 IEC 60947-5-4 IEC 60947-5-1 CSA C22.2 No 14 JIS C8201-1 ISO 22196:2011 ISO 21702
Product Certifications	UL listed CSA
Vibration Resistance	5 gn (f= 2…500 Hz) conforming to IEC 60068-2-6
Shock Resistance	30 gn (duration = 18 ms) for half sine wave acceleration conforming to IEC 60068-2-27 50 gn (duration = 11 ms) for half sine wave acceleration conforming to IEC 60068-2-27
Resistance To Fast Transients	2 kV conforming to IEC 61000-4-4
Resistance To Electromagnetic Fields	10 V/m conforming to IEC 61000-4-3
Resistance To Electrostatic Discharge	6 kV on contact (on metal parts) conforming to IEC 61000-4-2 8 kV in free air (in insulating parts) conforming to IEC 61000-4-2
Electromagnetic Emission	Class B conforming to IEC 55011

Packing Units

Unit Type Of Package 1	PCE
Number Of Units In Package 1	1
Package 1 Height	4.3 cm
Package 1 Width	5.3 cm
Package 1 Length	8.6 cm
Package 1 Weight	52.0 g

Sustainability

Green Premium™ label is Schneider Electric's commitment to delivering products with best-in-class environmental performance. Green Premium promises compliance with the latest regulations, transparency on environmental impacts, as well as circular and low-CO_2 products.

Guide to assessing product sustainability is a white paper that clarifies global eco-label standards and how to interpret environmental declarations.

Learn more about Green Premium >

Guide to assess a product's sustainability >

Transparency RoHS/REACh

Well-being performance

Mercury Free

Rohs Exemption Information	Yes

Certifications & Standards

Reach Regulation	REACh Declaration
Eu Rohs Directive	Pro-active compliance (Product out of EU RoHS legal scope)
China Rohs Regulation	China RoHS declaration
Environmental Disclosure	Product Environmental Profile
Weee	The product must be disposed on European Union markets following specific waste collection and never end up in rubbish bins
Circularity Profile	End of Life Information

Dimensions Drawings

Dimensions

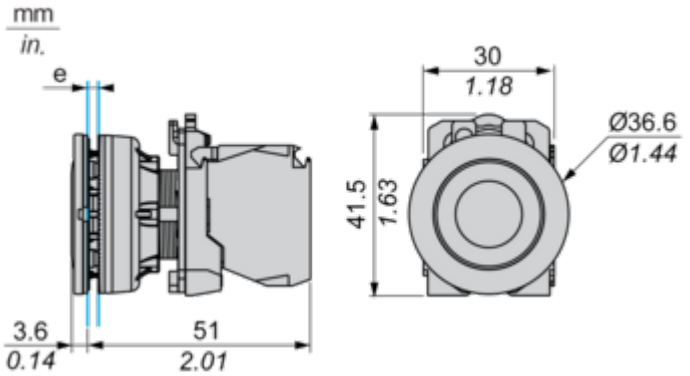

e: Clamping thickness: 1 to 6 mm / 0.04 to 0.24 in.

Mounting and Clearance

Panel Cut-out for Pushbuttons, Switches and Pilot Lights (Finished Holes, Ready for Installation)

Connection by Screw Clamp Terminals or Plug-in Connectors

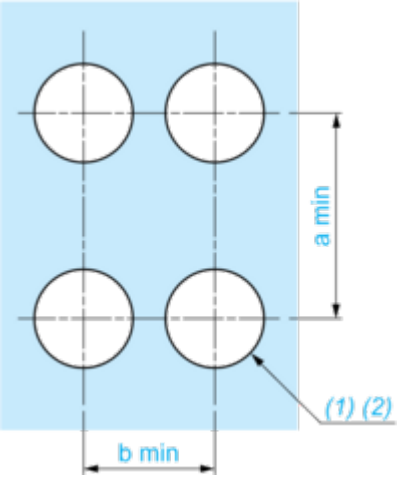

(1) Diameter on finished panel or support

(2) Ø30.75 mm recommended (Ø30.5 $_{0}^{+0.5}$) / Ø1.21 in. recommended (Ø1.20 in. $_{0}^{+0.0196}$)

Connections	a in mm	a in in.	b in mm	b in in.
By screw clamp terminals or plug-in connector	40	1.57	40	1.57
By Faston connectors	45	1.77	40	1.57

Technical Description

Electrical Composition Corresponding to Codes M1 and M7

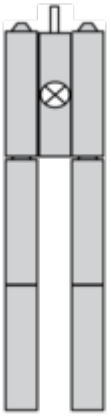

Electrical Composition Corresponding to Codes M2 and M8

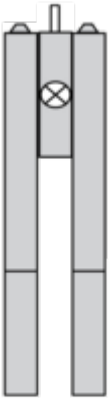

Electrical Composition Corresponding to Codes M6 and P2

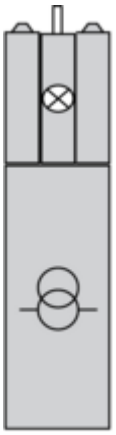

Electrical Composition Corresponding to Codes M5, M10, MF1, MR1 and MF2

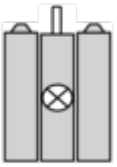

Legend

Single contact

Double contact

Light block

Possible location