# Product datasheet

Specifications

## Ø 60 mm illuminated LED unit - blinking - yellow - IP65 - 24 V AC/DC

XVUC48

## Main

| | |
|---|---|
| **Range Of Product** | Harmony XVU |
| **Product Or Component Type** | Modular tower light |
| **Beacon Or Indicator Bank Unit Type** | LED unit |
| **Mounting Diameter** | 60 mm |
| **Component Name** | XVU |
| **Light Source** | LED, yellow |
| **Device Application** | Automotive<br>Packaging machine<br>Machine tools |

## Complementary

| | |
|---|---|
| **Signalling Type** | Blinking |
| **Assembly Style** | Customer assembly, up to 5 units<br>Up to 4 units with buzzer |
| **Material** | PC (polycarbonate) V-2 conforming to UL 94<br>PC (polycarbonate) V-0 conforming to UL 94 |
| **[Us] Rated Supply Voltage** | 24 V AC/DC |
| **Maximum Power Dissipation In W** | 1.2 W |
| **Signalling Type** | Blinking |
| **Length** | 50 mm |
| **Net Weight** | 0.064 kg |

## Environment

| | |
|---|---|
| **Product Certifications** | CE<br>UL<br>CSA |
| **Ambient Air Temperature For Storage** | -40…70 °C |
| **Ip Degree Of Protection** | IP65 |
| **Ambient Air Temperature For Operation** | -25…50 °C |
| **Vibration Resistance** | 2 gn |

## Packing Units

| | |
|---|---|
| **Unit Type Of Package 1** | PCE |
| **Number Of Units In Package 1** | 1 |

Disclaimer: This documentation is not intended as a substitute for and is not to be used for determining suitability or reliability of these products for specific user applications

| | |
|---|---|
| **Package 1 Height** | 9.0 cm |
| **Package 1 Width** | 9.1 cm |
| **Package 1 Length** | 13.3 cm |
| **Package 1 Weight** | 143.0 g |
| **Unit Type Of Package 2** | S03 |
| **Number Of Units In Package 2** | 24 |
| **Package 2 Height** | 30 cm |
| **Package 2 Width** | 30 cm |
| **Package 2 Length** | 40 cm |
| **Package 2 Weight** | 4.034 kg |
| **Unit Type Of Package 3** | P06 |
| **Number Of Units In Package 3** | 192 |
| **Package 3 Height** | 75 cm |
| **Package 3 Width** | 60 cm |
| **Package 3 Length** | 80 cm |
| **Package 3 Weight** | 40 kg |

## Sustainability

**Green Premium™ label** is Schneider Electric's commitment to delivering products with best-in-class environmental performance. Green Premium promises compliance with the latest regulations, transparency on environmental impacts, as well as circular and low-$CO_2$ products.

**Guide to assessing product sustainability** is a white paper that clarifies global eco-label standards and how to interpret environmental declarations.

Learn more about Green Premium >

Guide to assess a product's sustainability >

Transparency RoHS/REACh

## Well-being performance

Mercury Free

| | |
|---|---|
| Rohs Exemption Information | Yes |

## Certifications & Standards

| | |
|---|---|
| **Reach Regulation** | REACh Declaration |
| **Eu Rohs Directive** | Pro-active compliance (Product out of EU RoHS legal scope) |
| **China Rohs Regulation** | China RoHS declaration |
| **Environmental Disclosure** | Product Environmental Profile |
| **Circularity Profile** | End of Life Information |

Dimensions Drawings

## Illuminated LED Unit

### Dimensions

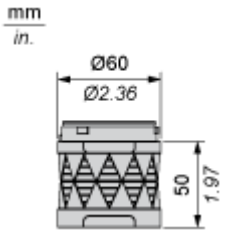

## Mounting and Clearance

### Modular Tower Lights Mounting

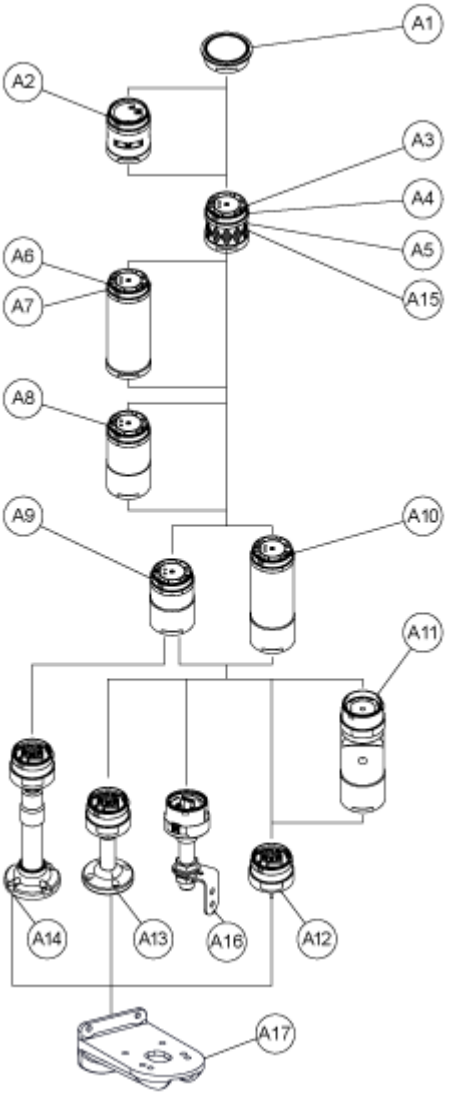


| Drawing | Part number | Part name |
|---|---|---|
| **A1** | - | Top cover |
| | - | Top cover (Silver) |
| **A2** | XVUC9S | Buzzer unit |
| | XVUC9SQ | Buzzer unit (Silver) |
| **A3** | XVUC23 | Green LED unit |
| | XVUC24 | Red LED unit |
| | XVUC25 | Orange LED unit |
| | XVUC26 | Blue LED unit |

| Drawing | Part number | Part name |
|---|---|---|
| | XVUC27 | White LED unit |
| | XVUC28 | Yellow LED unit |
| **A4** | XVUC29 | Multi-LED unit |
| **A5** | XVUC29P | Multi-LED unit, Pulse signal |
| **A6** | XVUC9V | Sound unit |
| **A7** | XVUC9VP | Sound unit, Pulse signal |
| **A8** | XVUC020 | Extender |
| | XVUC020Q | Extender (Silver) |
| **A9** | XVUC21B | DC body |
| | XVUC21BQ | DC body (Silver) |
| **A10** | XVUC21M | AC body NPN |
| | XVUC21MP | AC body PNP |
| | XVUC21MQP | AC body PNP (Silver) |
| **A11** | XVUZ06 | Flexible option |
| **A12** | XVUZ01 | Fixing Unit - Direct mounting (3 pins) |
| | XVUZ01Q | Fixing Unit - Direct mounting (Silver,3 pins) |
| | XVUZ03 | Fixing Unit - Direct mounting (2 pins) |
| | XVUZ04 | Fixing Unit - Direct mounting (4 pins) |
| **A13** | XVUZ02 | Fixing Unit - Plate with Pole (100 mm) |
| | XVUZ02Q | Fixing Unit - Plate with Pole (100 mm, Silver) |
| | XVUZ400 | Fixing Unit - Plate with Pole (400 mm) |
| | XVUZ800 | Fixing Unit - Plate with Pole (800 mm) |
| **A14** | XVUZ05 | Fixing Unit - Plate with adjustment pole (100-385 mm) |
| **A15** | XVUC43 | Green LED unit, Flash |
| | XVUC44 | Red LED unit, Flash |
| | XVUC45 | Orange LED unit, Flash |
| | XVUC46 | Blue LED unit, Flash |

| Drawing | Part number | Part name |
|---|---|---|
| | XVUC47 | White LED unit, Flash |
| | XVUC48 | Yellow LED unit, Flash |
| **A16** | XVUZ100T | Fixing Unit - Metal bracket with pole (100 mm) |
| | XVUZ250T | Fixing Unit - Metal bracket with pole(250 mm) |
| | XVUZ400T | Fixing Unit - Metal bracket with pole (400 mm) |
| **A17** | XVUZ12 | Fixing plate for use on vertical support - black |

## Connections and Schema

### Illuminated Units, Multi-LED and Audible Units Wiring

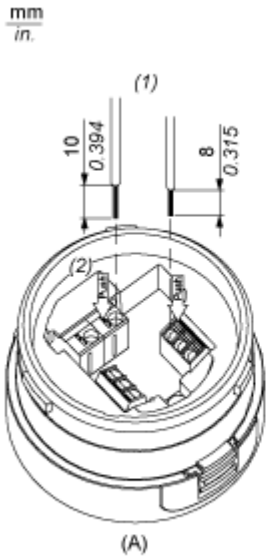


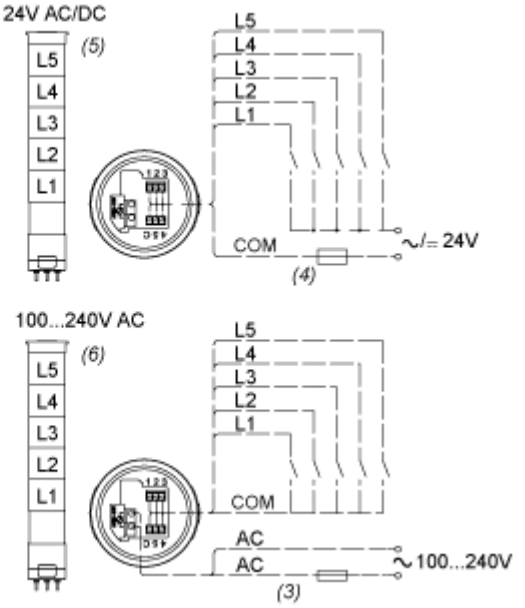


(A) Fixing Unit

(1) Dimensions of Wiring size

(2) Push-in Wire Connectors

(3) Fuse : 2A ,250V

(4) Fuse : 0.5A ,125V

(5) Modular Tower Lights 24V AC/DC

(6) Modular Tower Lights 100...240V AC

L1 to L5 : Illuminated LED Units