Product datasheet

Specifications

Green Premium™

circuit breaker,EasyPact EZC100F ,TMD, 25A ,3 poles 3d

EZC100F3025

Price: 70,529.52 NGN

Main

Range Of Product	EasyPact
Product Or Component Type	Circuit breaker
Device Short Name	Easypact EZC100F
Circuit Breaker Name	Easypact EZC100F
Device Application	Distribution
Poles Description	3P
Protected Poles Description	3t
Network Type	DC AC
Network Frequency	50/60 Hz
[In] Rated Current	25 A at 40 °C
[Ui] Rated Insulation Voltage	690 V AC 50/60 Hz conforming to IEC 60947-2
[Uimp] Rated Impulse Withstand Voltage	6 kV conforming to IEC 60947-2
[Ue] Rated Operational Voltage	550 V AC 50/60 Hz conforming to IEC 60947-2 250 V DC conforming to IEC 60947-2
Breaking Capacity Code	F
Breaking Capacity	25 kA Icu at 110...130 V AC 50/60 Hz conforming to IEC 60947-2 25 kA Icu at 220...240 V AC 50/60 Hz conforming to IEC 60947-2 5 kA Icu at 125 V DC 1P conforming to IEC 60947-2 5 kA Icu at 250 V DC 2P conforming to IEC 60947-2 5 kA Icu at 550 V AC 50/60 Hz conforming to IEC 60947-2 10 kA Icu at 380 V AC 50/60 Hz conforming to IEC 60947-2 10 kA Icu at 400...415 V AC 50/60 Hz conforming to IEC 60947-2 7.5 kA Icu at 440 V AC 50/60 Hz conforming to IEC 60947-2
[Ics] Rated Service Breaking Capacity	12.5 kA at 110/130 V AC 50/60 Hz conforming to IEC 60947-2 12.5 kA at 220/230/240 V AC 50/60 Hz conforming to IEC 60947-2 2.5 kA at 125 V DC conforming to IEC 60947-2 2.5 kA at 250 V DC conforming to IEC 60947-2 2.5 kA at 550 V AC 50/60 Hz conforming to IEC 60947-2 5 kA at 380 V AC 50/60 Hz conforming to IEC 60947-2 5 kA at 400/415 V AC 50/60 Hz conforming to IEC 60947-2 3.75 kA at 440 V AC 50/60 Hz conforming to IEC 60947-2
Suitability For Isolation	Yes conforming to IEC 60947-2
Utilisation Category	Category A
Trip Unit Name	TM-D
Trip Unit Technology	Thermal-magnetic
Trip Unit Rating	25 A at 50 °C
Protection Type	Short-circuit protection Overload protection

Disclaimer: This documentation is not intended as a substitute for and is not to be used for determining suitability or reliability of these products for specific user applications

Pollution Degree	3 conforming to IEC 60664-1 3 conforming to IEC 947-1

Complementary

Control Type	Toggle
Mounting Mode	Fixed
Mounting Support	Backplate
Upside Connection	Front
Downside Connection	Front
Mechanical Durability	8500 cycles
Electrical Durability	Category A: 1500 cycles 415 V AC 50/60 Hz conforming to IEC 60947-2
Connection Pitch	25 mm
Local Signalling	Positive contact indication
Neutral Protection Setting	Without protection
Earth-Leakage Protection	Without
Height	130 mm
Width	75 mm
Depth	60 mm

Environment

Standards	JIS C8201-2-2 EN/IEC 60947-2 EN/IEC 60947-1 GB/T 14048.2
Ip Degree Of Protection	IP20 conforming to IEC 60529
Ik Degree Of Protection	IK07 conforming to IEC 62262
Ambient Air Temperature For Operation	-25…70 °C
Ambient Air Temperature For Storage	-35…85 °C

Packing Units

Unit Type Of Package 1	PCE
Number Of Units In Package 1	1
Package 1 Height	9.5 cm
Package 1 Width	8.5 cm
Package 1 Length	14 cm
Package 1 Weight	828 g
Unit Type Of Package 2	S02
Number Of Units In Package 2	12
Package 2 Height	15 cm
Package 2 Width	30 cm
Package 2 Length	40 cm
Package 2 Weight	10.42 kg
Unit Type Of Package 3	P12

Number Of Units In Package 3	384
Package 3 Height	75 cm
Package 3 Width	80 cm
Package 3 Length	120 cm
Package 3 Weight	331 kg

Contractual warranty

Warranty	18 months

Sustainability

Green Premium™ label is Schneider Electric's commitment to delivering products with best-in-class environmental performance. Green Premium promises compliance with the latest regulations, transparency on environmental impacts, as well as circular and low-CO_2 products.

Guide to assessing product sustainability is a white paper that clarifies global eco-label standards and how to interpret environmental declarations.

Learn more about Green Premium >

Guide to assess a product's sustainability >

Transparency RoHS/REACh

Well-being performance

Reach Free Of Svhc	
Toxic Heavy Metal Free	
Mercury Free	
Rohs Exemption Information	Yes

Certifications & Standards

Reach Regulation	REACh Declaration
Eu Rohs Directive	Compliant EU RoHS Declaration
China Rohs Regulation	China RoHS declaration
Environmental Disclosure	Product Environmental Profile
Weee	The product must be disposed on European Union markets following specific waste collection and never end up in rubbish bins
Circularity Profile	No need of specific recycling operations

Dimensions Drawings

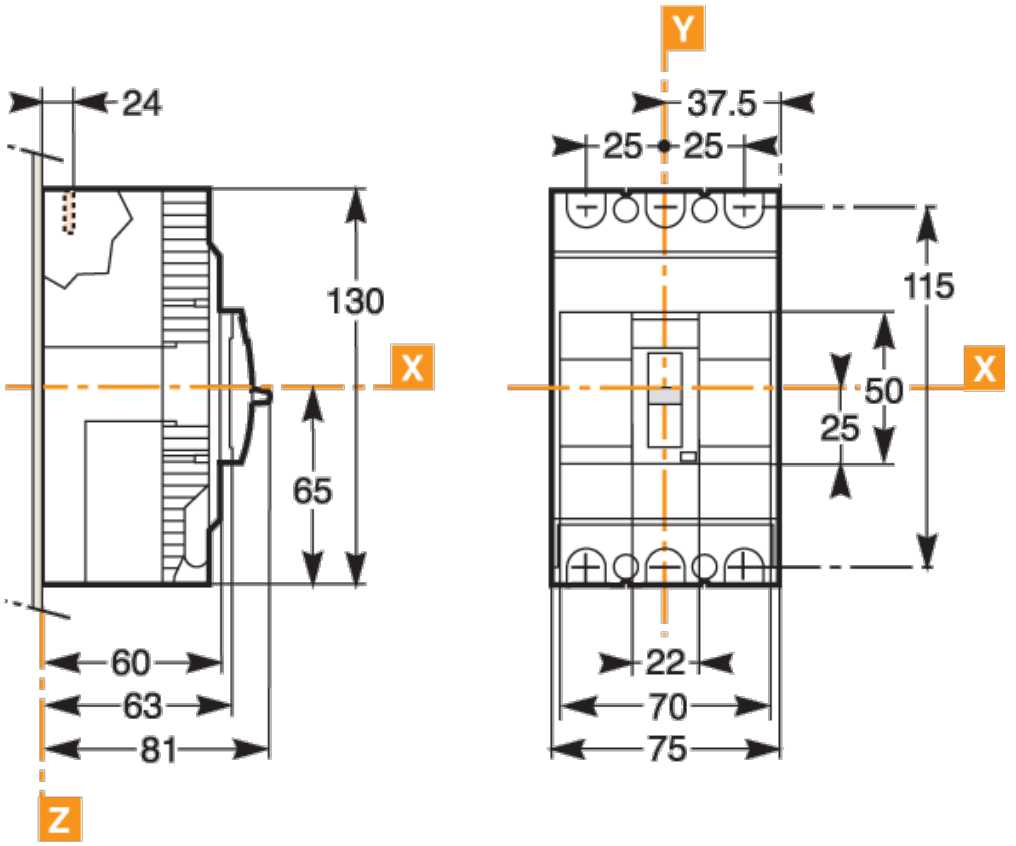

Assembly

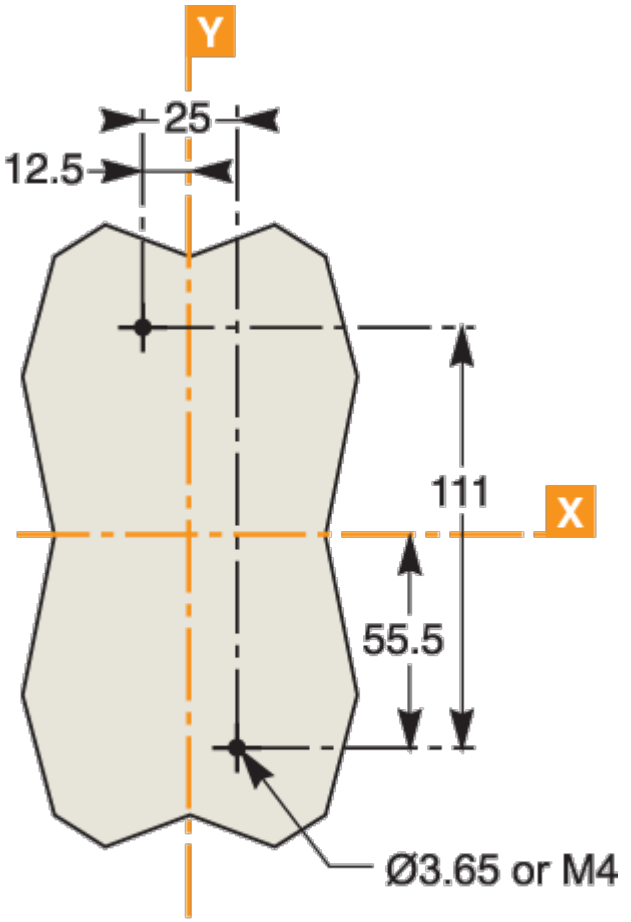
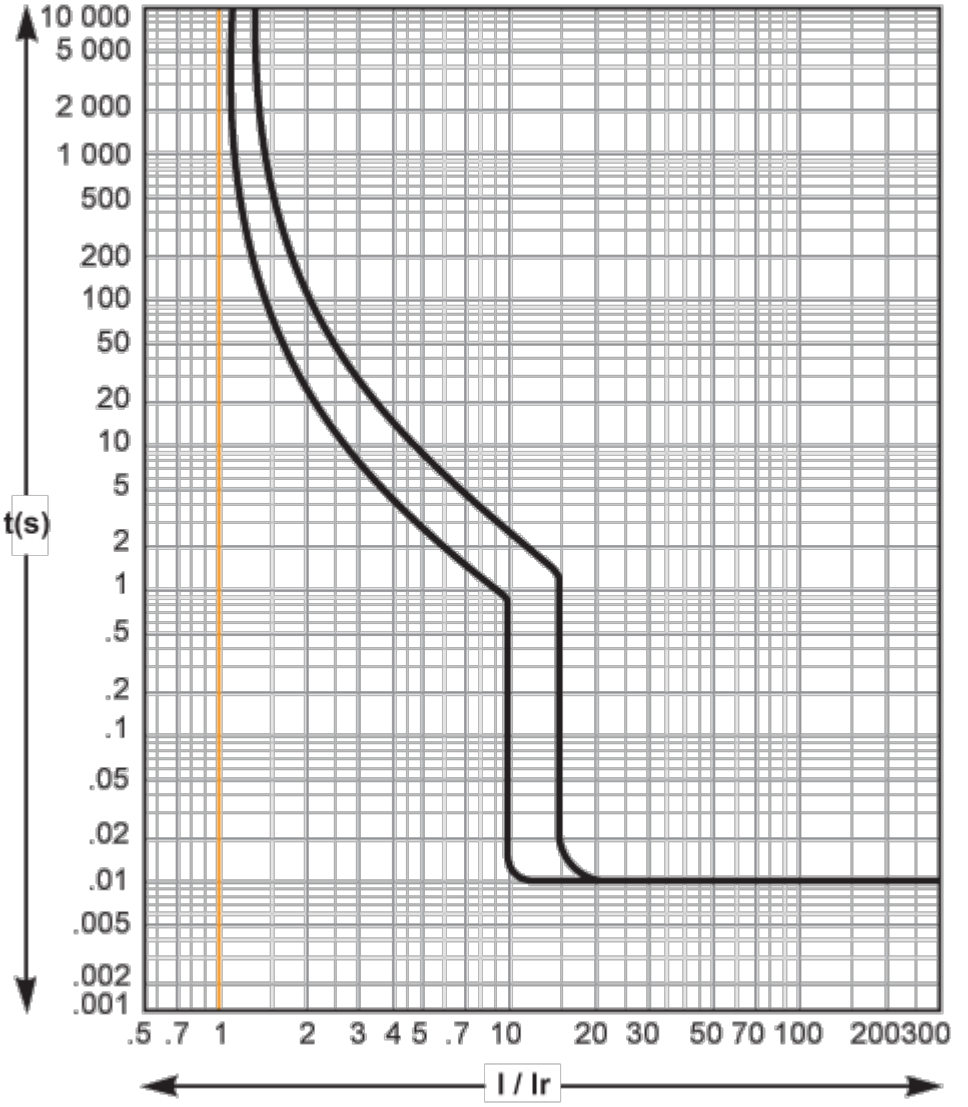
Performance Curves