Product datasheet

Specifications

Complete pilot light, Harmony XB6, round white, plastic, 16mm, integral LED 12...24V

XB6AV1BB

Price: 25,909.77 NGN

Main

Range Of Product	Harmony XB6
Product Or Component Type	Complete pilot light
Device Short Name	XB6
Bezel Material	Plastic
Mounting Diameter	16 mm
Sale Per Indivisible Quantity	1
Shape Of Signaling Unit Head	Round
Cap/Operator Or Lens Colour	White
Light Source	LED
Bulb Base	Integral LED
Light Block Supply	Direct
[Us] Rated Supply Voltage	12...24 V AC/DC

Complementary

Height	18 mm
Width	18 mm
Depth	57 mm
Terminals Description Iso N°1	(+ -)PL
Net Weight	0.015 kg
Operating Position	Any position
Connections - Terminals	Faston connectors, connection size: 2.8 x 0.5 mm
[Ui] Rated Insulation Voltage	250 V (pollution degree 2) conforming to EN/IEC 60947-1
[Uimp] Rated Impulse Withstand Voltage	4 kV conforming to EN/IEC 60947-1
Signalling Type	Steady
Supply Voltage Limits	6…30 V AC/DC
Current Consumption	15 mA
Surge Withstand	1 kV direct contact conforming to IEC 61000-4-5 2 kV in free air conforming to IEC 61000-4-5

Environment

Protective Treatment	TC
Ambient Air Temperature For Storage	-40…70 °C

Disclaimer: This documentation is not intended as a substitute for and is not to be used for determining suitability or reliability of these products for specific user applications

Ambient Air Temperature For Operation	-25…70 °C
Electrical Shock Protection Class	Class II conforming to IEC 61140
Ip Degree Of Protection	IP65 conforming to IEC 60529
Nema Degree Of Protection	NEMA 13 conforming to UL 50 NEMA 4 conforming to UL 50 NEMA 4X conforming to UL 50 NEMA 13 conforming to CSA C22.2 No 94 NEMA 4 conforming to CSA C22.2 No 94 NEMA 4X conforming to CSA C22.2 No 94
Standards	EN/IEC 60947-1 EN/IEC 60947-5-5 CSA C22.2 No 14 UL 508 JIS C 852 EN/IEC 60947-5-1 JIS C8201-5-1 JIS C8201-1
Product Certifications	CCC GOST CSA UL
Vibration Resistance	+/- 3 mm (f= 2…500 Hz) conforming to IEC 60068-2-6 5 gn (f= 2…500 Hz) conforming to IEC 60068-2-6
Shock Resistance	30 gn (duration = 18 ms) for half sine wave acceleration conforming to IEC 60068-2-27 50 gn (duration = 11 ms) for half sine wave acceleration conforming to IEC 60068-2-27
Resistance To Fast Transients	2 kV conforming to IEC 61000-4-4
Resistance To Electromagnetic Fields	10 V/m conforming to IEC 61000-4-3
Resistance To Electrostatic Discharge	6 kV on contact (on metal parts) conforming to IEC 61000-4-2 8 kV in free air (in insulating parts) conforming to IEC 61000-4-2
Electromagnetic Emission	Class B conforming to EN 55011

Packing Units

Unit Type Of Package 1	PCE
Number Of Units In Package 1	1
Package 1 Height	2 cm
Package 1 Width	11 cm
Package 1 Length	16 cm
Package 1 Weight	11 g
Unit Type Of Package 2	S01
Number Of Units In Package 2	60
Package 2 Height	15 cm
Package 2 Width	15 cm
Package 2 Length	40 cm
Package 2 Weight	878 g

Contractual warranty

Warranty	18 months

Sustainability

Green Premium™ label is Schneider Electric's commitment to delivering products with best-in-class environmental performance. Green Premium promises compliance with the latest regulations, transparency on environmental impacts, as well as circular and low-CO_2 products.

Guide to assessing product sustainability is a white paper that clarifies global eco-label standards and how to interpret environmental declarations.

Learn more about Green Premium >

Guide to assess a product's sustainability >

Transparency RoHS/REACh

Well-being performance

Mercury Free

Rohs Exemption Information	Yes

Certifications & Standards

Reach Regulation	REACh Declaration
Eu Rohs Directive	Pro-active compliance (Product out of EU RoHS legal scope)
China Rohs Regulation	China RoHS declaration
Environmental Disclosure	Product Environmental Profile
Weee	The product must be disposed on European Union markets following specific waste collection and never end up in rubbish bins
Circularity Profile	End of Life Information

Dimensions Drawings

Circular Head Pilot Light

Dimensions

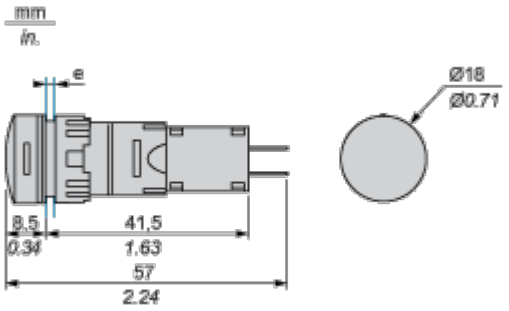

e panel thickness 1 to 6 mm/0.03 to 0.23 in.

Mounting and Clearance

Panel Cut-out
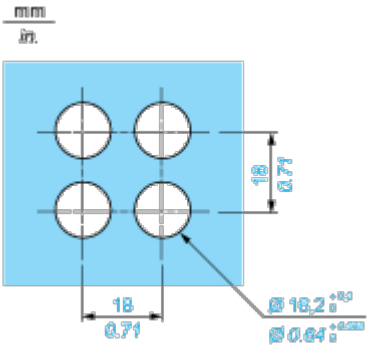
For Square or Circular Head