Product data sheet

Specifications

CANopen interface I/O block, Modicon TM7, IP67, 16 M8

TM7NCOM16B

Main

Range Of Product	Modicon TM7
Product Or Component Type	CANopen interface I/O block
Range Compatibility	Modicon LMC058 Modicon M258
Enclosure Material	Plastic
Bus Type	CANopen
[Ue] Rated Operational Voltage	24 V DC
Input/Output Number	16
Input/Output Number Of Block	16 I/O

Complementary

Discrete Input Number	0…16 configurable by software
Discrete Input Voltage	24 V
Discrete Input Voltage Type	DC
Discrete Input Current	4.4 mA
Discrete Input Logic	Positive
Discrete Output Number	0…16 output(s) configurable by software
Discrete Output Voltage	24 V
Discrete Output Voltage Type	DC
Discrete Output Current	<= 0.5 A
Discrete Output Type	Transistor
Sensor Power Supply	24 V, 500 mA for all channels with overload, short-circuit and reverse polarity protection
Electrical Connection	1 male connector M12 - A coding - 5 ways for CANopen bus IN 1 female connector M12 - B coding - 4 ways for TM7 bus OUT 1 male connector M8 - 4 ways for power IN 1 female connector M8 - 4 ways for power OUT 1 female connector M12 - A coding - 5 ways for CANopen bus OUT 16 female connectors M8 - 3 ways for sensor or actuator
Local Signalling	2 LEDs for bus diagnostic 1 LED for actuator power supply diagnostics 1 LED for sensor power supply diagnostics
Operating Position	Any position
Fixing Mode	By 2 screws
Net Weight	0.32 kg

Disclaimer: This documentation is not intended as a substitute for and is not to be used for determining suitability or reliability of these products for specific user applications

Environment

Standards	IEC 61131-2
Product Certifications	GOST-R C-Tick ATEX II 3g EEx nA II T5 cURus
Marking	CE
Ambient Air Temperature For Operation	-10…60 °C
Ambient Air Temperature For Storage	-25…85 °C
Relative Humidity	5…95 % without condensation or dripping water
Pollution Degree	2 conforming to IEC 60664
Ip Degree Of Protection	IP67 conforming to IEC 61131-2
Operating Altitude	0...2000 m
Storage Altitude	0…3000 m
Vibration Resistance	7.5 mm constant amplitude (f= 2…8 Hz) conforming to IEC 60721-3-5 Class 5M3 2 gn constant acceleration (f= 8…200 Hz) conforming to IEC 60721-3-5 Class 5M3 4 gn constant acceleration (f= 200…500 Hz) conforming to IEC 60721-3-5 Class 5M3
Shock Resistance	30 gn for 11 ms conforming to IEC 60721-3-5 Class 5M3
Resistance To Electrostatic Discharge	6 kV in contact conforming to IEC 61000-4-2 8 kV in air conforming to IEC 61000-4-2
Resistance To Electromagnetic Fields	10 V/m 0.08…2 Hz conforming to IEC 61000-4-3 1 V/m 2…2.7 Hz conforming to IEC 61000-4-3
Resistance To Fast Transients	2 kV (power supply) conforming to IEC 61000-4-4 1 kV (input/output) conforming to IEC 61000-4-4 1 kV (shielded cable) conforming to IEC 61000-4-4
Surge Withstand For Dc 24 V Circuit	1 kV power supply (common mode) conforming to IEC 61000-4-5 0.5 kV power supply (differential mode) conforming to IEC 61000-4-5 1 kV unshielded links (common mode) conforming to IEC 61000-4-5 0.5 kV unshielded links (differential mode) conforming to IEC 61000-4-5 1 kV shielded links (common mode) conforming to IEC 61000-4-5 0.5 kV shielded links (differential mode) conforming to IEC 61000-4-5
Electromagnetic Compatibility	EN/IEC 61000-4-6
Disturbance Radiated/Conducted	CISPR 11

Packing Units

Unit Type Of Package 1	PCE
Number Of Units In Package 1	1
Package 1 Height	4.500 cm
Package 1 Width	5.500 cm
Package 1 Length	17.800 cm
Package 1 Weight	381.000 g
Unit Type Of Package 2	S02
Number Of Units In Package 2	24
Package 2 Height	15.000 cm
Package 2 Width	30.000 cm
Package 2 Length	40.000 cm
Package 2 Weight	9.555 kg

Contractual warranty

Warranty	18 months

Sustainability

Green Premium™ label is Schneider Electric's commitment to delivering products with best-in-class environmental performance. Green Premium promises compliance with the latest regulations, transparency on environmental impacts, as well as circular and low-CO_2 products.

Guide to assessing product sustainability is a white paper that clarifies global eco-label standards and how to interpret environmental declarations.

Learn more about Green Premium >

Guide to assess a product's sustainability >

Transparency RoHS/REACh

Well-being performance

Reach Free Of Svhc	
Toxic Heavy Metal Free	
Mercury Free	
Rohs Exemption Information	Yes
Pvc Free	

Certifications & Standards

Reach Regulation	REACh Declaration
Eu Rohs Directive	Pro-active compliance (Product out of EU RoHS legal scope) EU RoHS Declaration
China Rohs Regulation	China RoHS declaration
Environmental Disclosure	Product Environmental Profile
Weee	The product must be disposed on European Union markets following specific waste collection and never end up in rubbish bins
Circularity Profile	End of Life Information

Presentation

TM7 CANopen Interface I/O Block

Description

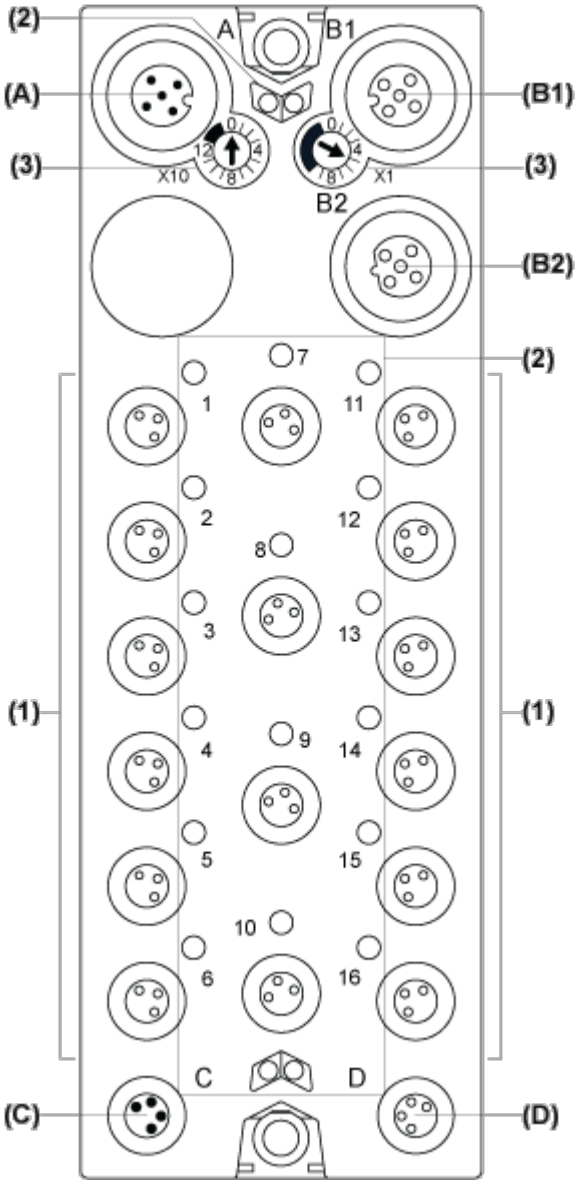

(A) CANopen bus IN connector

(B1) CANopen bus OUT connector

(B2) TM7 bus OUT connector

(C) 24 Vdc power IN connector

(D) 24 Vdc power OUT connector

(1) Input / Output connectors

(2) Status and channel LEDs

(3) CANopen address settings rotary switches

Connector and Channel Assignments

I/O connectors	Channel types	Channels
1	Input/Output	I0/Q0
2	Input/Output	I1/Q1
3	Input/Output	I2/Q2
4	Input/Output	I3/Q3
5	Input/Output	I4/Q4
6	Input/Output	I5/Q5
7	Input/Output	I6/Q6
8	Input/Output	I7/Q7
9	Input/Output	I8/Q8
10	Input/Output	I9/Q9
11	Input/Output	I10/Q10
12	Input/Output	I11/Q11
13	Input/Output	I12/Q12
14	Input/Output	I13/Q13
15	Input/Output	I14/Q14
16	Input/Output	I15/Q15

Dimensions Drawings

TM7 Block, Size 2

Dimensions

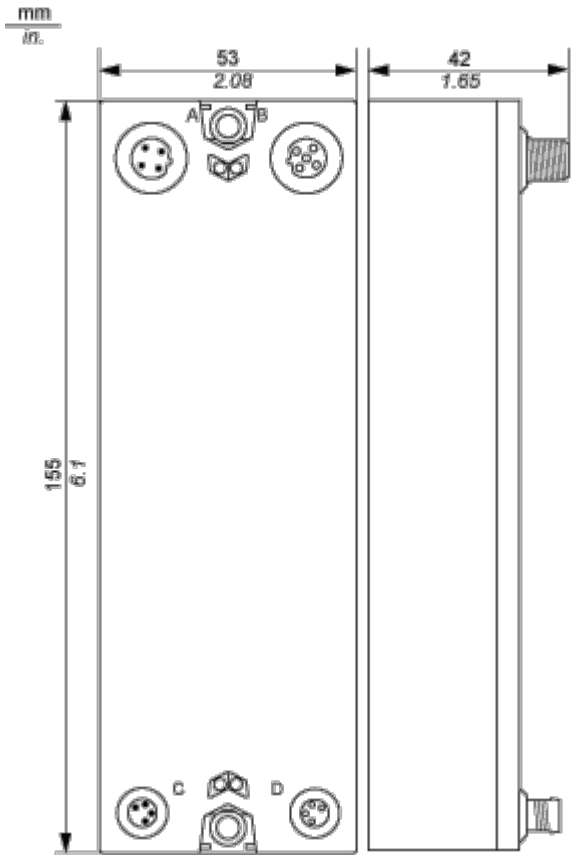

Mounting and Clearance

Spacing Requirements

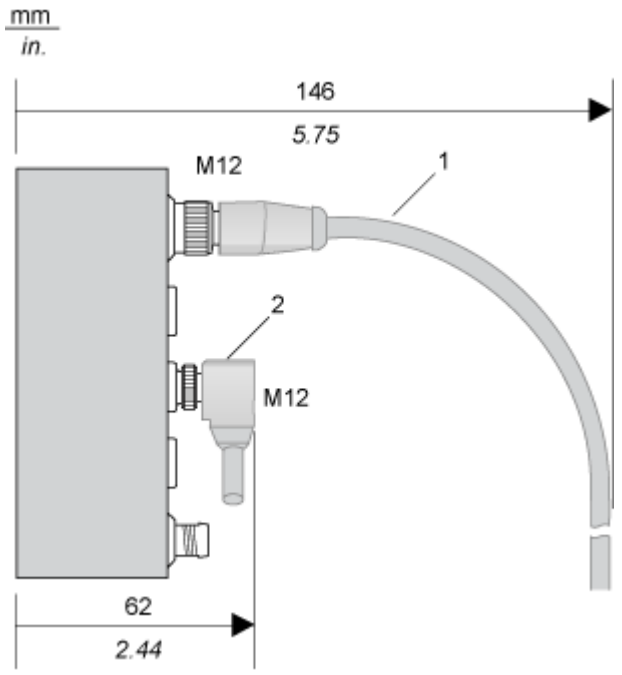

1 Straight cable

2 Elbowed cable

Installation Guidelines

TM7 Block on an Aluminium Frame

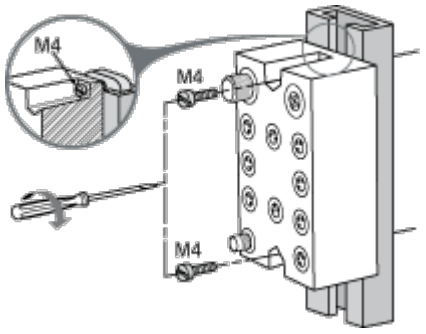

NOTE: Maximum torque to fasten the required M4 screws is 0.6 N.m (5.3 lbf-in).

TM7 Block on a DIN Rail

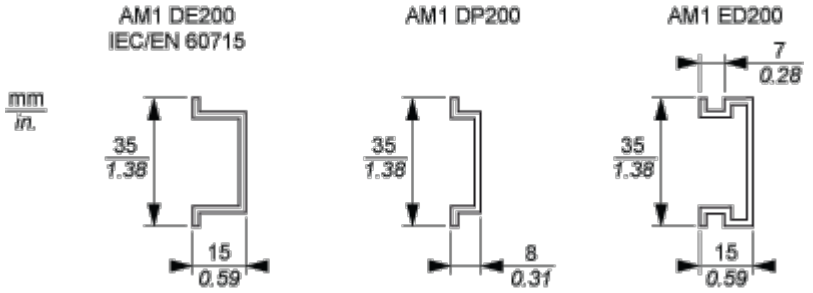

NOTE: Only size 1 (smallest) blocks can be installed on DIN rail with the TM7ACMP mounting plate.

TM7 Block Directly on the Machine

Drilling template of the block:

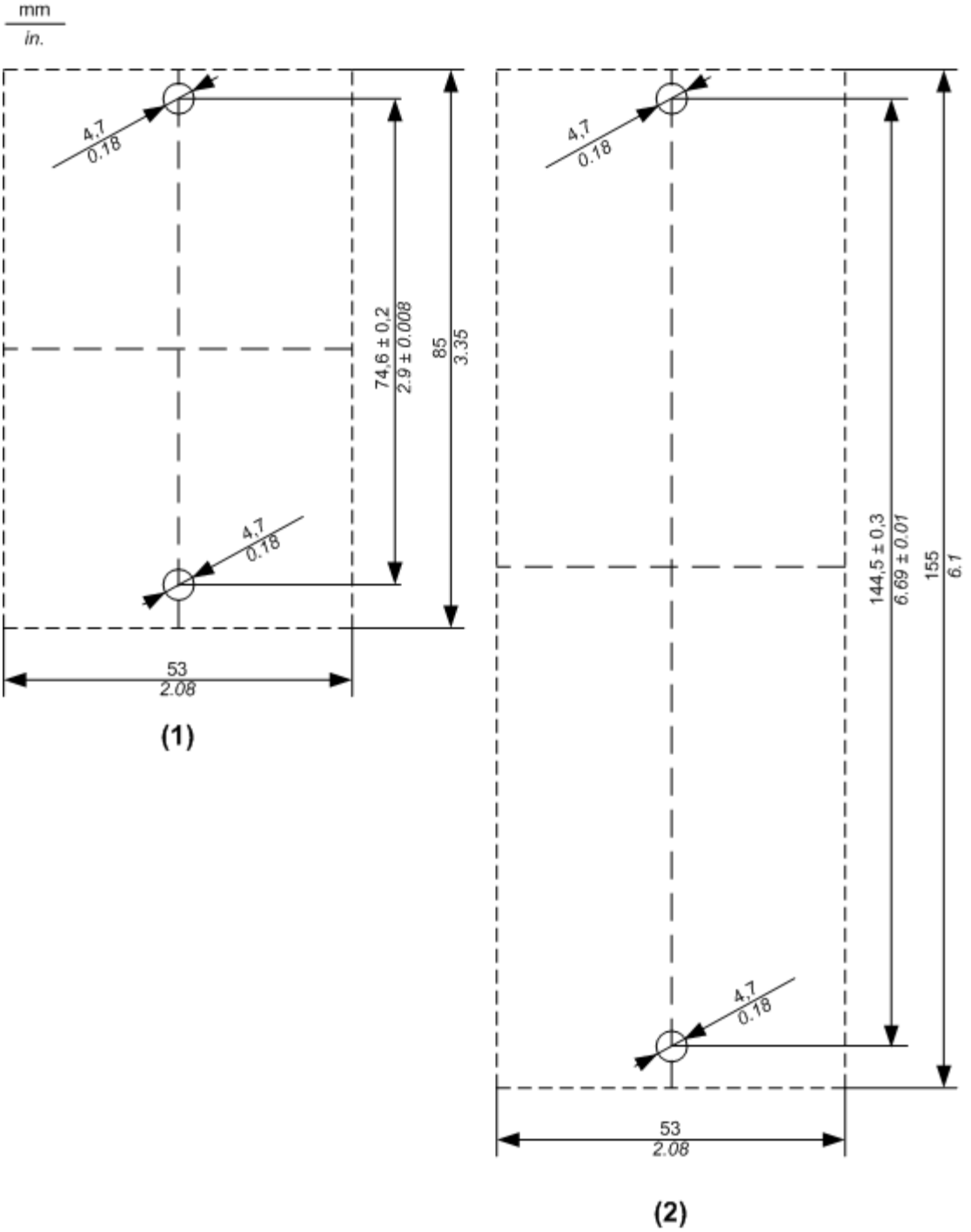

(1) Size 1

(2) Size 2

The thickness of the base plate should be taken into consideration when defining the screw length.

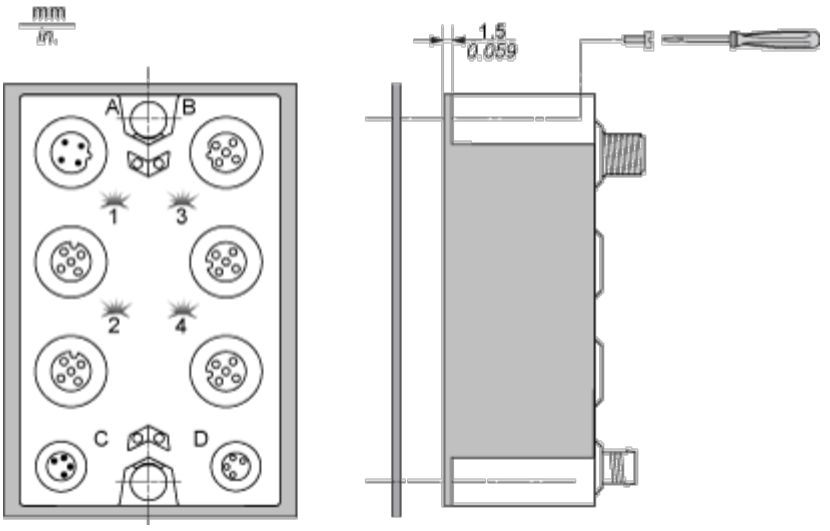

NOTE: Maximum torque to fasten the required M4 screws is 0.6 N.m (5.3 lbf-in).

Connections and Schema

Wiring Diagram

Pin Assignments for I/O Connectors

Connection	Pin	Designation
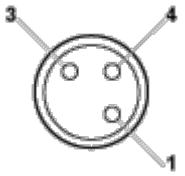	1	24 Vdc sensor / actuator supply
	3	0 Vdc
	4	DI/DO: input/output signal

CANopen Pins and Connectors

Connector Assignments

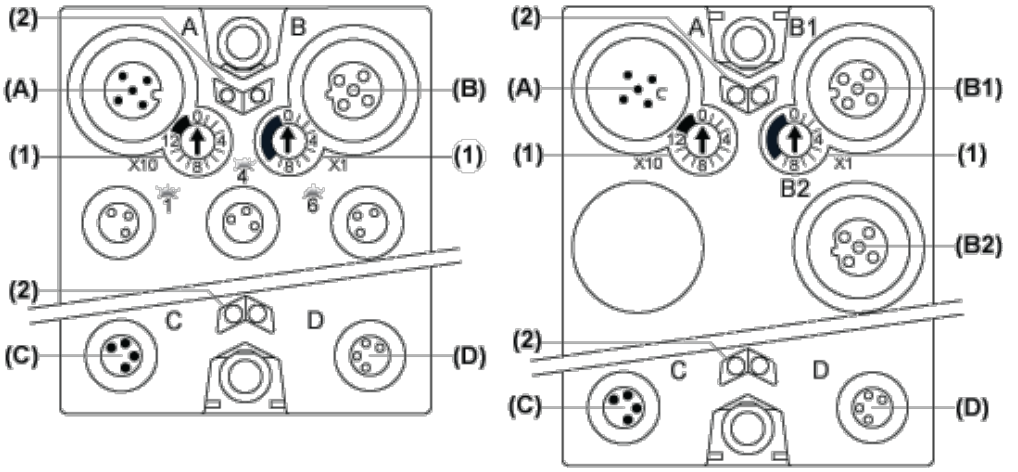

(A) Field bus IN connector

(B) and (B2) TM7 bus OUT connector M12

(B1) CANopen bus OUT connector M12

(C) 24 Vdc power IN connector

(D) 24 Vdc power OUT connector

(1) Address settings rotary switches

(2) Status LEDs

Pin Assignments

Connectors	Pin	Designation
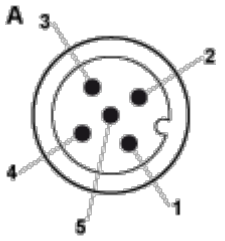	1	CAN_SHLD
	2	(CAN_V+)
	3	CAN_GND
	4	CAN_H
	5	CAN_L
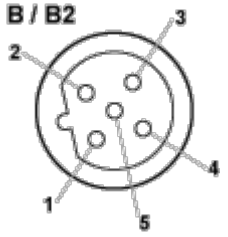	1	TM7 V+
	2	TM7 Bus Data
	3	TM7 0V
	4	TM7 Bus Data
	5	N.C.
	1	CAN_SHLD

Connectors	Pin	Designation
	2	(CAN_V+)
	3	CAN_GND
	4	CAN_H
	5	CAN_L

Connectors	Pin	Designation
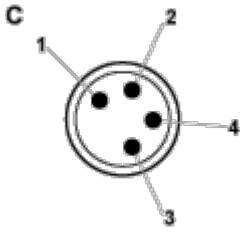	1	24 Vdc main power
	2	24 Vdc I/O power segment
	3	0 Vdc
	4	0 Vdc
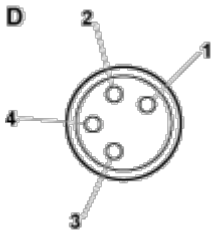	1	24 Vdc I/O power segment
	2	24 Vdc I/O power segment
	3	0 Vdc
	4	0 Vdc

Wiring the Power Supply

Connections	2 Power Supplies
24 Vdc main power that generates power for TM7 power bus	PS1
24 Vdc I/O power segment	PS2

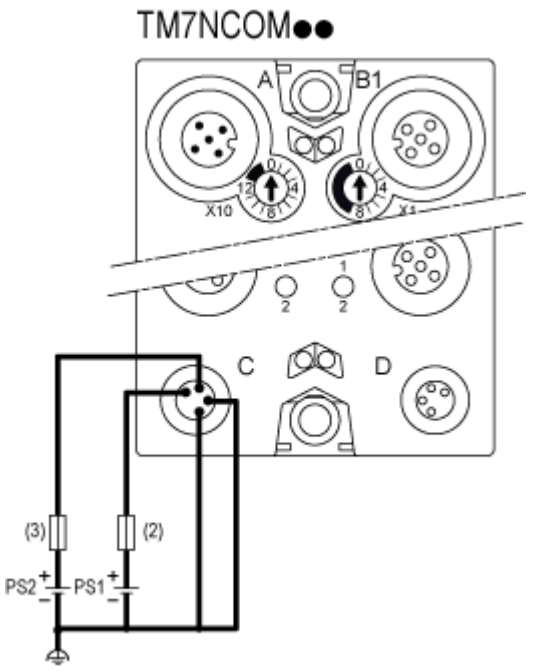

(2) External fuse, Type T slow-blow, 1 A, 250 V [1]

(3) External fuse, Type T slow-blow, 4 A max., 250 V

PS1 External isolated main power supply, 24 Vdc

PS2 External isolated I/O power supply, 24 Vdc

[1] Fuse limited to 1 A per PDB, maximum fuse limited to 5 A with maximum 4 PDB interconnected. If less then 4 PDBs size the fuse in accordance with the number of PDBs.

Performance Curves

Switching Inductive Load Characteristics

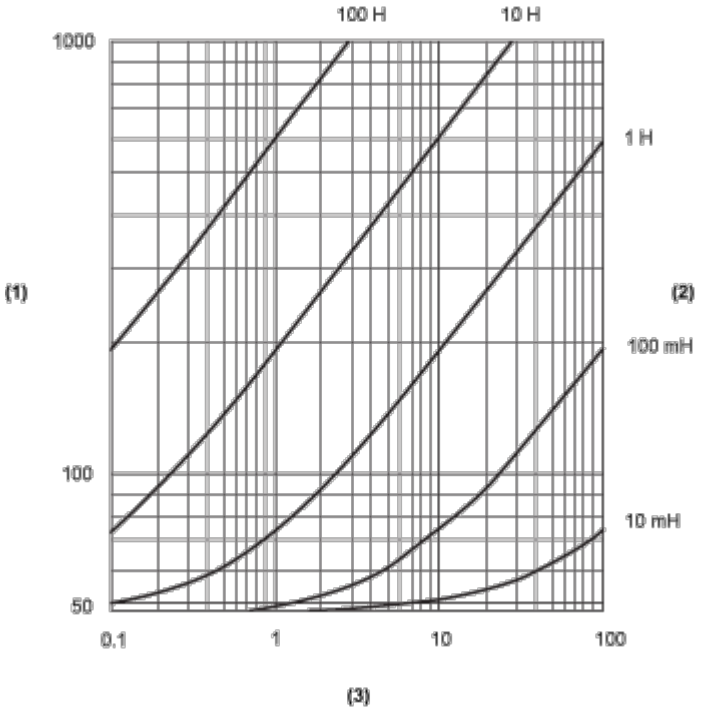

(1) Load resistance in Ω

(2) Load inductance in H

(3) Max. operating cycles / second