Product data sheet

Specifications

Green Premium™

module XPSAF - Emergency stop - 24 V AC DC

XPSAF5130P

Discontinued on: 30/06/2021

End-of-service on: 31/12/2023

To be discontinued

Main

Range Of Product	Preventa Safety automation
Product Or Component Type	Preventa safety module
Safety Module Name	XPSAF
Safety Module Application	For emergency stop and switch monitoring
Function Of Module	Monitoring of a movable guard Emergency stop monitoring 2-channel wiring Emergency stop monitoring 1-channel wiring
Safety Level	Can reach PL e/category 4 conforming to EN/ISO 13849-1 Can reach category 3 conforming to EN/IEC 62061
Safety Reliability Data	DC > 99 % conforming to EN/ISO 13849-1 MTTFd = 243 years conforming to EN/ISO 13849-1 PFHd = 4.62E-9 1/h conforming to EN/IEC 62061
Type Of Start	Configurable
Connections - Terminals	Captive screw clamp terminals, removable terminal block, 1 x 0.2...1 x 2.5 mm² flexible with cable end, with double bezel Captive screw clamp terminals, removable terminal block, 1 x 0.2...1 x 2.5 mm² solid with cable end, with double bezel Captive screw clamp terminals, removable terminal block, 1 x 0.25...1 x 2.5 mm² flexible with cable end, with double bezel Captive screw clamp terminals, removable terminal block, 2 x 0.2...2 x 1 mm² solid with cable end, with double bezel Captive screw clamp terminals, removable terminal block, 2 x 0.2...2 x 1.5 mm² flexible with cable end, with double bezel Captive screw clamp terminals, removable terminal block, 2 x 0.25...2 x 1 mm² flexible with cable end, with double bezel Captive screw clamp terminals, removable terminal block, 2 x 0.5...2 x 1.5 mm² flexible with cable end, with double bezel
Output Type	Relay instantaneous opening, 3 NO circuit(s), volt-free
Number Of Additional Circuits	0
[Us] Rated Supply Voltage	24 V AC - 15...10 % 24 V DC - 15...10 %

Complementary

Synchronisation Time Between Inputs	Unlimited
Supply Frequency	50/60 Hz
Maximum Power Consumption In Va	5 VA AC
Input Protection Type	Internal, electronic
[Uc] Control Circuit Voltage	24 V
Maximum Line Resistance	90 Ohm

Disclaimer: This documentation is not intended as a substitute for and is not to be used for determining suitability or reliability of these products for specific user applications

Breaking Capacity	180 VA holding AC-15 C300 relay output 1800 VA inrush AC-15 C300 relay output
Breaking Capacity	1.5 A at 24 V (DC-13) time constant: 50 ms for relay output
Output Thermal Current	6 A per relay for relay output
[Ith] Conventional Free Air Thermal Current	18 A
Associated Fuse Rating	4 A gG or gL for relay output conforming to EN/IEC 60947-5-1, DIN VDE 0660 part 200 6 A fast blow for relay output conforming to EN/IEC 60947-5-1, DIN VDE 0660 part 200
Minimum Output Current	10 mA for relay output
Minimum Output Voltage	17 V for relay output
Maximum Response Time On Input Open	40 ms
[Ui] Rated Insulation Voltage	300 V (pollution degree 2) conforming to IEC 60947-5-1 300 V (pollution degree 2) conforming to DIN VDE 0110 part 1
[Uimp] Rated Impulse Withstand Voltage	4 kV overvoltage category III conforming to IEC 60947-5-1 4 kV overvoltage category III conforming to DIN VDE 0110 part 1
Local Signalling	3 LEDs
Current Consumption	30 mA at 24 V AC on power supply
Mounting Support	35 mm symmetrical DIN rail
Net Weight	0.25 kg

Environment

Standards	EN 1088/ISO 14119 EN 60204-1 EN/IEC 60947-5-1 EN/ISO 13850
Product Certifications	UL CSA TÜV
Ip Degree Of Protection	IP20 (terminals) conforming to EN/IEC 60529 IP40 (enclosure) conforming to EN/IEC 60529
Ambient Air Temperature For Operation	-25…60 °C
Ambient Air Temperature For Storage	-40…85 °C

Packing Units

Unit Type Of Package 1	PCE
Number Of Units In Package 1	1
Package 1 Height	2.8 cm
Package 1 Width	11.6 cm
Package 1 Length	14.2 cm
Package 1 Weight	260.0 g
Unit Type Of Package 2	S01
Number Of Units In Package 2	16
Package 2 Height	15.0 cm
Package 2 Width	15.0 cm
Package 2 Length	40.0 cm

Package 2 Weight	4.452 kg

Contractual warranty

Warranty	18 months

Sustainability

Green Premium™ label is Schneider Electric's commitment to delivering products with best-in-class environmental performance. Green Premium promises compliance with the latest regulations, transparency on environmental impacts, as well as circular and low-CO_2 products.

Guide to assessing product sustainability is a white paper that clarifies global eco-label standards and how to interpret environmental declarations.

Learn more about Green Premium >

Guide to assess a product's sustainability >

Transparency RoHS/REACh

Well-being performance

Mercury Free	
Rohs Exemption Information	Yes
Pvc Free	

Certifications & Standards

Reach Regulation	REACh Declaration
Eu Rohs Directive	Pro-active compliance (Product out of EU RoHS legal scope)
China Rohs Regulation	China RoHS declaration
Environmental Disclosure	Product Environmental Profile
Weee	The product must be disposed on European Union markets following specific waste collection and never end up in rubbish bins
Circularity Profile	End of Life Information

Dimensions Drawings
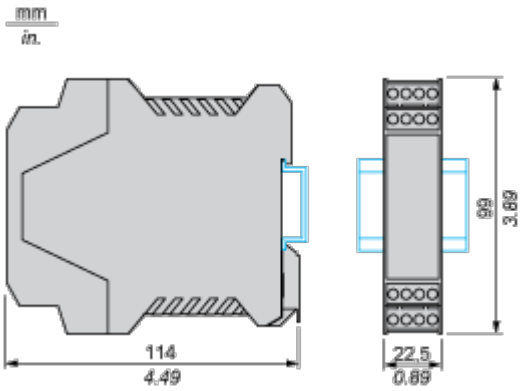
Dimensions