Product data sheet

Specifications

Green Premium™

discrete output module Modicon Quantum - 16 O - 83..253 V AC

140DAO84210

Discontinued on: Dec 31, 2022

To be end-of-service on: Dec 31, 2030

Discontinued

Main

Range Of Product	Modicon Quantum automation platform
Product Or Component Type	AC discrete output modules
Discrete Output Number	16

Complementary

Group Of Channels	4 groups of 4 channels
Supply Frequency	47...63 Hz
Maximum Voltage Drop	1.5 V
Discrete Output Voltage	83...253 V AC
Addressing Requirement	1 output word
Absolute Maximum Output	300 Vrms for 10 s AC 400 Vrms 1 cycle AC
Maximum Load Current	2 mA rms 115 Vrms off state leakage per output 2.5 mA rms 230 Vrms off state leakage per output 3 A rms 170...253 V per output 4 A rms 85...132 V per output 16 A rms per module 4 A rms per group
Surge Current	10 A during 3 cycles per point 20 A during 2 cycles per point 30 A during 1 cycle per point 25 A during 3 cycles per group 30 A during 2 cycles per group 45 A during 1 cycle per group
Dv/Dt	400 V/ms
Response Time	<= 0.5 ms at state 0 to state 1 <= 0.5 ms at state 1 to state 0
Fault Indication	Blown fuse Loss of field power
Protection Type	Internal by RC filter Internal output protection by 5 A fuse
Power Dissipation	1.85 + (1.1 V x total module load current)
Marking	CE
Local Signalling	1 LED (green) for bus communication is present (Active) 1 LED (red) for external fault detected (F) 16 LEDs (green) for input status
Bus Current Requirement	350 mA
Module Format	Standard

List Price displayed is VAT EXCLUSIVE.

Disclaimer: This documentation is not intended as a substitute for and is not to be used for determining suitability or reliability of these products for specific user applications

Net Weight	0.45 kg

Environment

Product Certifications	cUL FM Class 1 Division 2
Standards	UL 508 CSA C22.2 No 142
Electromagnetic Compatibility	Electrostatic discharge immunity test - test level: 4 kV (contact discharge) conforming to IEC 801-2 Electrostatic discharge immunity test - test level: 8 kV (air discharge) conforming to IEC 801-2 Susceptibility to electromagnetic fields - test level: 10 V/m (80...1000 MHz) conforming to IEC 801-3
Ambient Air Temperature For Operation	0…60 °C
Ambient Air Temperature For Storage	-40…85 °C
Relative Humidity	95 % without condensation
Operating Altitude	<= 5000 m

Packing Units

Unit Type Of Package 1	PCE
Number Of Units In Package 1	1
Package 1 Height	16.3 cm
Package 1 Width	4.5 cm
Package 1 Length	31.2 cm
Package 1 Weight	634.0 g
Unit Type Of Package 2	S03
Number Of Units In Package 2	7
Package 2 Height	30.0 cm
Package 2 Width	30.0 cm
Package 2 Length	40.0 cm
Package 2 Weight	4.53 kg

Contractual warranty

Warranty	18 months

Sustainability

Green Premium™ label is Schneider Electric's commitment to delivering products with best-in-class environmental performance. Green Premium promises compliance with the latest regulations, transparency on environmental impacts, as well as circular and low-CO_2 products.

Guide to assessing product sustainability is a white paper that clarifies global eco-label standards and how to interpret environmental declarations.

Learn more about Green Premium >

Guide to assess a product's sustainability >

RoHS/REACh

Well-being performance

Reach Free Of Svhc	
Mercury Free	
Rohs Exemption Information	Yes

Certifications & Standards

Eu Rohs Directive	Pro-active compliance (Product out of EU RoHS legal scope) EU RoHS Declaration
China Rohs Regulation	China RoHS declaration
Weee	The product must be disposed on European Union markets following specific waste collection and never end up in rubbish bins
Circularity Profile	End of Life Information

Dimensions Drawings

Racks for Modules Mounting

Dimensions of Modules and Racks

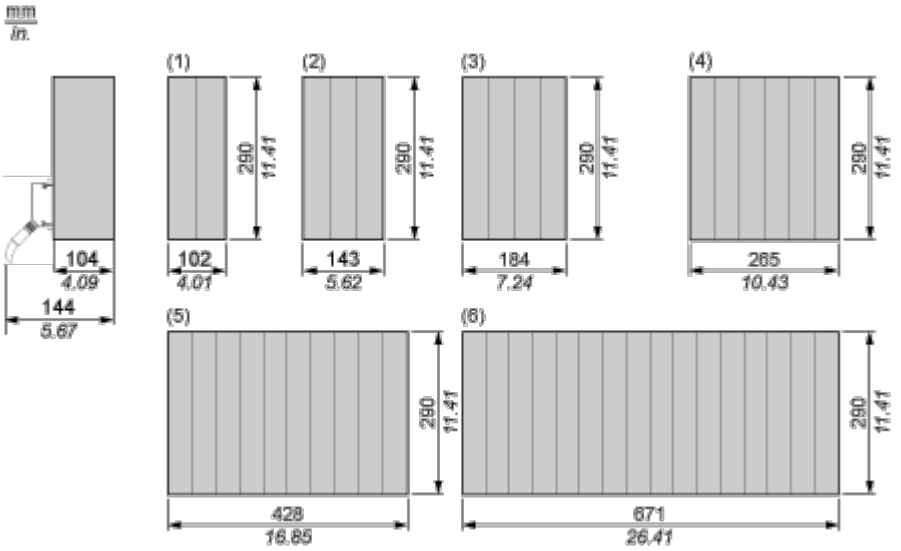

(1) 2 slots

(2) 3 slots

(3) 4 slots

(4) 6 slots

(5) 10 slots

(6) 16 slots

Connections and Schema

100...230 Vac Discrete Output Module

Wiring Diagram

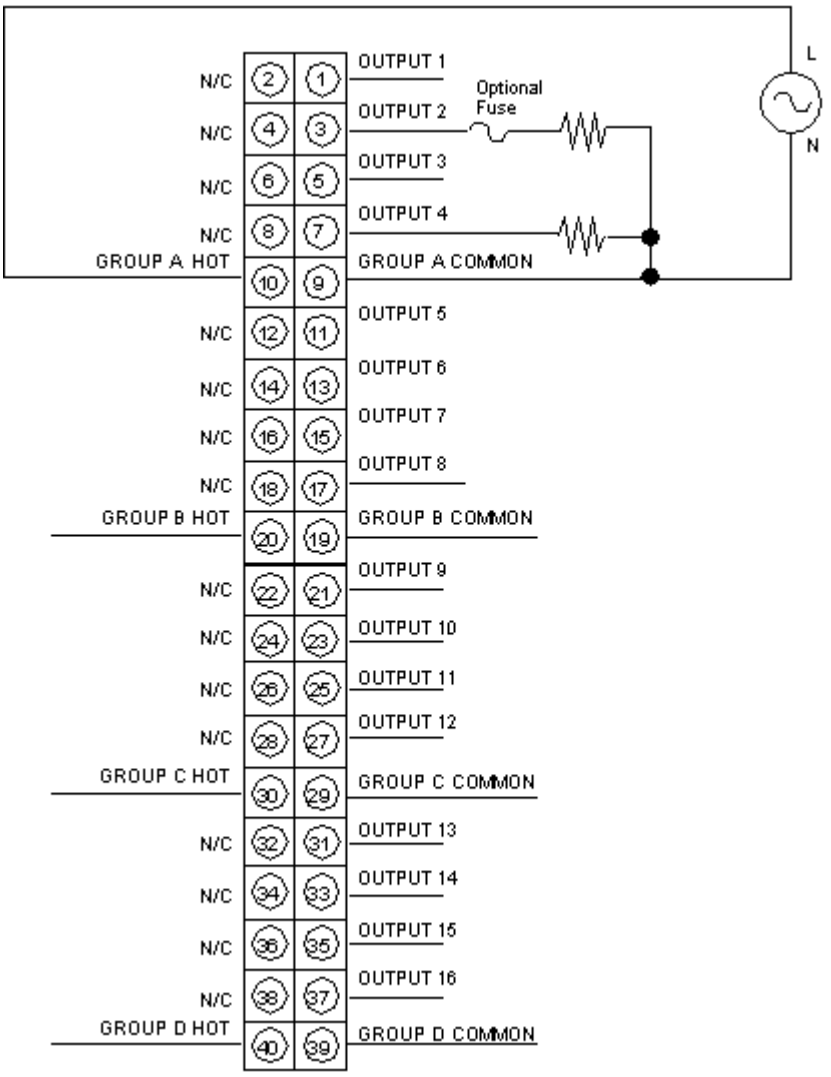

N/C Not Connected