# Product data sheet

Specifications

## variable speed drive ATV630 - 11kW/15HP - 200...240V - IP21/ UL type 1

ATV630D11M3

## Main

| | |
|---|---|
| **Range Of Product** | Altivar Process ATV600 |
| **Product Or Component Type** | Variable speed drive |
| **Product Specific Application** | Process and utilities |
| **Device Short Name** | ATV630 |
| **Variant** | Standard version |
| **Product Destination** | Asynchronous motors<br>Synchronous motors |
| **Emc Filter** | Without EMC filter |
| **Ip Degree Of Protection** | IP21 conforming to IEC 61800-5-1<br>IP21 conforming to IEC 60529 |
| **[Us] Rated Supply Voltage** | 200...240 V |
| **Degree Of Protection** | UL type 1 conforming to UL 508C |
| **Type Of Cooling** | Forced convection |
| **Supply Frequency** | 50...60 Hz - 5...5 % |
| **[Us] Rated Supply Voltage** | 200...240 V - 15...10 % |
| **Motor Power Kw** | 11 kW (normal duty)<br>7.5 kW (heavy duty) |
| **Motor Power Hp** | 15 hp normal duty<br>10 hp heavy duty |
| **Line Current** | 39.3 A at 200 V (normal duty)<br>32.9 A at 240 V (normal duty)<br>27.2 A at 200 V (heavy duty)<br>23.1 A at 240 V (heavy duty) |
| **Prospective Line Isc** | 50 kA |
| **Apparent Power** | 13.7 kVA at 240 V (normal duty)<br>9.6 kVA at 240 V (heavy duty) |
| **Continuous Output Current** | 46.8 A at 4 kHz for normal duty<br>32.7 A at 4 kHz for heavy duty |
| **Asynchronous Motor Control Profile** | Optimized torque mode<br>Variable torque standard<br>Constant torque standard |
| **Synchronous Motor Control Profile** | Permanent magnet motor<br>Synchronous reluctance motor |
| **Speed Drive Output Frequency** | 0.1…500 Hz |
| **Nominal Switching Frequency** | 4 kHz |
| **Switching Frequency** | 2...12 kHz adjustable<br>4...12 kHz with derating factor |

List Price displayed is VAT EXCLUSIVE.

Disclaimer: This documentation is not intended as a substitute for and is not to be used for determining suitability or reliability of these products for specific user applications

| | |
|---|---|
| **Safety Function** | STO (safe torque off) SIL 3 |
| **Discrete Input Logic** | 16 preset speeds |
| **Communication Port Protocol** | Ethernet<br>Modbus serial<br>Modbus TCP |
| **Option Card** | Slot A: communication module, Profibus DP V1<br>Slot A: communication module, PROFINET<br>Slot A: communication module, DeviceNet<br>Slot A: communication module, Modbus TCP/EtherNet/IP<br>Slot A: communication module, CANopen daisy chain RJ45<br>Slot A: communication module, CANopen SUB-D 9<br>Slot A: communication module, CANopen screw terminals<br>Slot A/slot B: digital and analog I/O extension module<br>Slot A/slot B: output relay extension module<br>Slot A: communication module, Ethernet IP/Modbus TCP/MD-Link<br>Communication module, BACnet MS/TP<br>Communication module, Ethernet Powerlink |

## Complementary

| | |
|---|---|
| **Mounting Mode** | Wall mount |
| **Maximum Transient Current** | 51.5 A during 60 s (normal duty)<br>49.1 A during 60 s (heavy duty) |
| **Network Number Of Phases** | 3 phases |
| **Discrete Output Number** | 0 |
| **Discrete Output Type** | Relay outputs R1A, R1B, R1C 250 V AC 3000 mA<br>Relay outputs R1A, R1B, R1C 30 V DC 3000 mA<br>Relay outputs R2A, R2C 250 V AC 5000 mA<br>Relay outputs R2A, R2C 30 V DC 5000 mA<br>Relay outputs R3A, R3C 250 V AC 5000 mA<br>Relay outputs R3A, R3C 30 V DC 5000 mA |
| **Output Voltage** | <= power supply voltage |
| **Permissible Temporary Current Boost** | 1.1 x In during 60 s (normal duty)<br>1.5 x In during 60 s (heavy duty) |
| **Motor Slip Compensation** | Can be suppressed<br>Not available in permanent magnet motor law<br>Automatic whatever the load<br>Adjustable |
| **Acceleration And Deceleration Ramps** | Linear adjustable separately from 0.01...9999 s |
| **Physical Interface** | Ethernet<br>2-wire RS 485 |
| **Braking To Standstill** | By DC injection |
| **Protection Type** | Thermal protection: motor<br>Safe torque off: motor<br>Motor phase break: motor<br>Thermal protection: drive<br>Safe torque off: drive<br>Overheating: drive<br>Overcurrent between output phases and earth: drive<br>Overload of output voltage: drive<br>Short-circuit protection: drive<br>Motor phase break: drive<br>Overvoltages on the DC bus: drive<br>Line supply overvoltage: drive<br>Line supply undervoltage: drive<br>Line supply phase loss: drive<br>Overspeed: drive<br>Break on the control circuit: drive |
| **Transmission Rate** | 10, 100 Mbits<br>4800 bps, 9600 bps, 19200 bps, 38.4 Kbps |
| **Frequency Resolution** | Display unit: 0.1 Hz<br>Analog input: 0.012/50 Hz |

| | |
|---|---|
| **Transmission Frame** | RTU |
| **Electrical Connection** | Control: removable screw terminals 0.5...1.5 mm²/AWG 20...AWG 16<br>Motor: screw terminal 16 mm²/AWG 6<br>Line side: screw terminal 10...16 mm²/AWG 8...AWG 6 |
| **Connector Type** | RJ45 (on the remote graphic terminal) for Ethernet/Modbus TCP<br>RJ45 (on the remote graphic terminal) for Modbus serial |
| **Data Format** | 8 bits, configurable odd, even or no parity |
| **Type Of Polarization** | No impedance |
| **Exchange Mode** | Half duplex, full duplex, autonegotiation Ethernet/Modbus TCP |
| **Number Of Addresses** | 1…247 for Modbus serial |
| **Method Of Access** | Slave Modbus TCP |
| **Supply** | External supply for digital inputs: 24 V DC (19…30 V), <1.25 mA, protection type: overload and short-circuit protection<br>Internal supply for reference potentiometer (1 to 10 kOhm): 10.5 V DC +/- 5 %, <10 mA, protection type: overload and short-circuit protection<br>Internal supply for digital inputs and STO: 24 V DC (21…27 V), <200 mA, protection type: overload and short-circuit protection |
| **Local Signalling** | 3 LEDs for local diagnostic<br>3 LEDs (dual colour) for embedded communication status<br>4 LEDs (dual colour) for communication module status<br>1 LED (red) for presence of voltage |
| **Width** | 211 mm |
| **Height** | 546 mm |
| **Depth** | 232 mm |
| **Net Weight** | 13.8 kg |
| **Analogue Input Number** | 3 |
| **Analogue Input Type** | AI1, AI2, AI3 software-configurable voltage: 0...10 V DC, impedance: 31.5 kOhm, resolution 12 bits<br>AI1, AI2, AI3 software-configurable current: 0...20 mA, impedance: 250 Ohm, resolution 12 bits<br>AI2 voltage analog input: - 10...10 V DC, impedance: 31.5 kOhm, resolution 12 bits |
| **Discrete Input Number** | 8 |
| **Discrete Input Type** | DI7, DI8 programmable as pulse input: 0…30 kHz, 24 V DC (<= 30 V) |
| **Input Compatibility** | DI1...DI6: discrete input level 1 PLC conforming to IEC 61131-2<br>DI5, DI6: discrete input level 1 PLC conforming to IEC 65A-68<br>STOA, STOB: discrete input level 1 PLC conforming to IEC 61131-2 |
| **Discrete Input Logic** | Positive logic (source) (DI1...DI8), < 5 V (state 0), > 11 V (state 1)<br>Negative logic (sink) (DI1...DI8), > 16 V (state 0), < 10 V (state 1) |
| **Analogue Output Number** | 2 |
| **Analogue Output Type** | Software-configurable voltage AQ1, AQ2: 0...10 V DC impedance 470 Ohm, resolution 10 bits<br>Software-configurable current AQ1, AQ2: 0...20 mA, resolution 10 bits<br>Software-configurable current DQ-, DQ+: 30 V DC<br>Software-configurable current DQ-, DQ+: 100 mA |
| **Sampling Duration** | 2 ms +/- 0.5 ms (DI1...DI4) - discrete input<br>5 ms +/- 1 ms (DI5, DI6) - discrete input<br>5 ms +/- 0.1 ms (AI1, AI2, AI3) - analog input<br>10 ms +/- 1 ms (AO1) - analog output |
| **Accuracy** | +/- 0.6 % AI1, AI2, AI3 for a temperature variation 60 °C analog input<br>+/- 1 % AO1, AO2 for a temperature variation 60 °C analog output |
| **Linearity Error** | AI1, AI2, AI3: +/- 0.15 % of maximum value for analog input<br>AO1, AO2: +/- 0.2 % for analog output |
| **Relay Output Number** | 3 |

| | |
|---|---|
| **Relay Output Type** | Configurable relay logic R1: fault relay NO/NC electrical durability 100000 cycles<br>Configurable relay logic R2: sequence relay NO electrical durability 100000 cycles<br>Configurable relay logic R3: sequence relay NO electrical durability 100000 cycles |
| **Refresh Time** | Relay output (R1, R2, R3): 5 ms (+/- 0.5 ms) |
| **Minimum Switching Current** | Relay output R1, R2, R3: 5 mA at 24 V DC |
| **Maximum Switching Current** | Relay output R1, R2, R3 on resistive load, cos phi = 1: 3 A at 250 V AC<br>Relay output R1, R2, R3 on resistive load, cos phi = 1: 3 A at 30 V DC<br>Relay output R1, R2, R3 on inductive load, cos phi = 0.4 and L/R = 7 ms: 2 A at 250 V AC<br>Relay output R1, R2, R3 on inductive load, cos phi = 0.4 and L/R = 7 ms: 2 A at 30 V DC |
| **Isolation** | Between power and control terminals |
| **Maximum Output Frequency** | 500 kHz |
| **Maximum Input Current** | 39.3 A |
| **Variable Speed Drive Application Selection** | Building - HVAC compressor centrifugal<br>Food and beverage processing other application<br>Mining mineral and metal fan<br>Mining mineral and metal pump<br>Oil and gas fan<br>Water and waste water other application<br>Building - HVAC screw compressor<br>Food and beverage processing pump<br>Food and beverage processing fan<br>Food and beverage processing atomization<br>Oil and gas electro submersible pump (ESP)<br>Oil and gas water injection pump<br>Oil and gas jet fuel pump<br>Oil and gas compressor for refinery<br>Water and waste water centrifuge pump<br>Water and waste water positive displacement pump<br>Water and waste water electro submersible pump (ESP)<br>Water and waste water screw pump<br>Water and waste water lobe compressor<br>Water and waste water screw compressor<br>Water and waste water compressor centrifugal<br>Water and waste water fan<br>Water and waste water conveyor<br>Water and waste water mixer |
| **Motor Power Range Ac-3** | 7…11 kW at 200…240 V 3 phases |
| **Quantity Per Set** | 1 |
| **Enclosure Mounting** | Wall mounted |

# Environment

| | |
|---|---|
| **Insulation Resistance** | > 1 MOhm 500 V DC for 1 minute to earth |
| **Noise Level** | 59.5 dB conforming to 86/188/EEC |
| **Power Dissipation In W** | Natural convection: 62 W at 200 V, switching frequency 4 kHz<br>Forced convection: 452 W at 200 V, switching frequency 4 kHz |
| **Volume Of Cooling Air** | 215 m3/h |
| **Operating Position** | Vertical +/- 10 degree |
| **Maximum Thdi** | <48 % from 80...100 % of load conforming to IEC 61000-3-12 |
| **Electromagnetic Compatibility** | Electrostatic discharge immunity test level 3 conforming to IEC 61000-4-2<br>Radiated radio-frequency electromagnetic field immunity test level 3 conforming to IEC 61000-4-3<br>Electrical fast transient/burst immunity test level 4 conforming to IEC 61000-4-4<br>1.2/50 µs - 8/20 µs surge immunity test level 3 conforming to IEC 61000-4-5<br>Conducted radio-frequency immunity test level 3 conforming to IEC 61000-4-6 |
| **Pollution Degree** | 2 conforming to IEC 61800-5-1 |
| **Vibration Resistance** | 1.5 mm peak to peak (f= 2…13 Hz) conforming to IEC 60068-2-6<br>1 gn (f= 13…200 Hz) conforming to IEC 60068-2-6 |

| | |
|---|---|
| **Shock Resistance** | 15 gn for 11 ms conforming to IEC 60068-2-27 |
| **Relative Humidity** | 5…95 % without condensation conforming to IEC 60068-2-3 |
| **Ambient Air Temperature For Operation** | -15…50 °C (without derating)<br>50…60 °C (with derating factor) |
| **Ambient Air Temperature For Storage** | -40…70 °C |
| **Operating Altitude** | <= 1000 m without derating<br>1000...4800 m with current derating 1 % per 100 m |
| **Product Certifications** | DNV-GL<br>UL<br>CSA<br>ATEX zone 2/22<br>TÜV<br>ATEX INERIS |
| **Marking** | CE |
| **Standards** | UL 508C<br>IEC 61800-3<br>IEC 61800-3 environment 1 category C2<br>EN/IEC 61800-3 environment 2 category C3<br>IEC 61800-5-1<br>IEC 61000-3-12<br>IEC 60721-3<br>IEC 61508<br>IEC 13849-1 |
| **Overvoltage Category** | III |
| **Regulation Loop** | Adjustable PID regulator |
| **Noise Level** | 59.5 dB |
| **Pollution Degree** | 2 |

## Packing Units

| | |
|---|---|
| **Unit Type Of Package 1** | PCE |
| **Number Of Units In Package 1** | 1 |
| **Package 1 Height** | 26.0 cm |
| **Package 1 Width** | 34.0 cm |
| **Package 1 Length** | 74.0 cm |
| **Package 1 Weight** | 17.851 kg |
| **Unit Type Of Package 2** | P06 |
| **Number Of Units In Package 2** | 4 |
| **Package 2 Height** | 86.0 cm |
| **Package 2 Width** | 60.0 cm |
| **Package 2 Length** | 80.0 cm |
| **Package 2 Weight** | 84.404 kg |

## Sustainability

**Green Premium™ label** is Schneider Electric's commitment to delivering products with best-in-class environmental performance. Green Premium promises compliance with the latest regulations, transparency on environmental impacts, as well as circular and low-$CO_2$ products.

**Guide to assessing product sustainability** is a white paper that clarifies global eco-label standards and how to interpret environmental declarations.

Learn more about Green Premium >

Guide to assess a product's sustainability >

Transparency RoHS/REACh

## Resource performance

- Upgraded Components Available

## Well-being performance

- Mercury Free
- Rohs Exemption Information — Yes

## Certifications & Standards

| | |
|---|---|
| **Reach Regulation** | REACh Declaration |
| **Eu Rohs Directive** | Pro-active compliance (Product out of EU RoHS legal scope) |
| **China Rohs Regulation** | China RoHS declaration |
| **Environmental Disclosure** | Product Environmental Profile |
| **Weee** | The product must be disposed on European Union markets following specific waste collection and never end up in rubbish bins |
| **Circularity Profile** | End of Life Information |

Dimensions Drawings

## Dimensions

### Drives with IP21 Top Cover

**Front and Left Views**

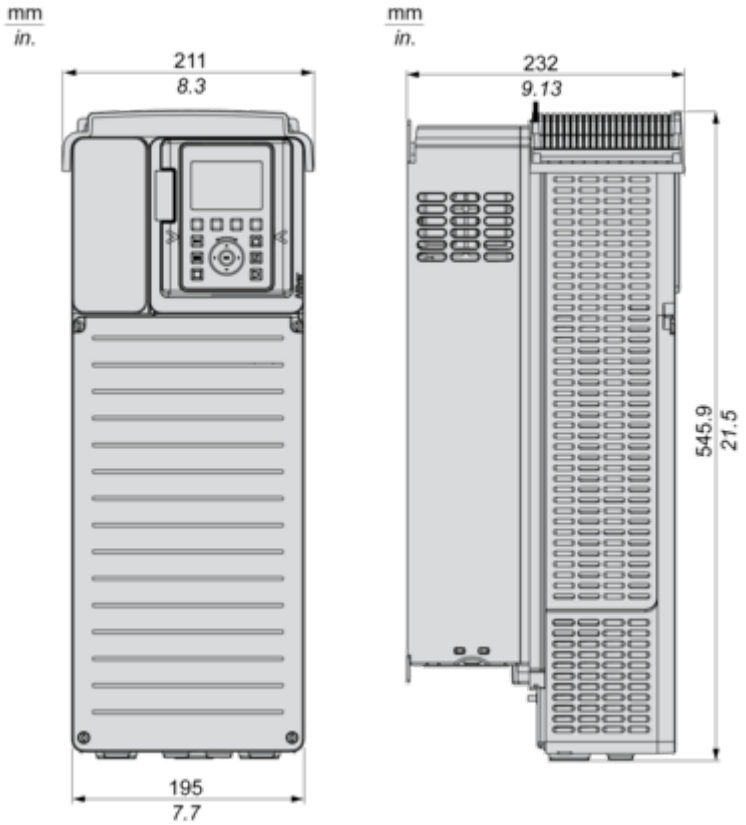


### Drives Without IP21 Top Cover

**Left and Rear Views**

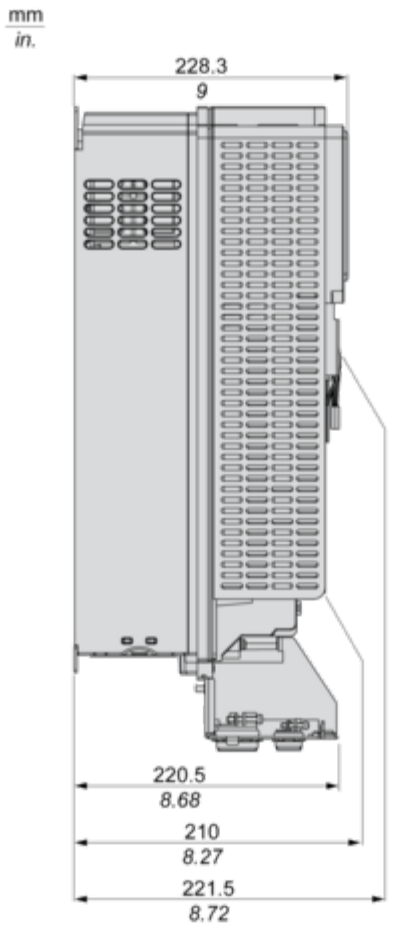
mm
in.
228.3
9
220.5
8.68
210
8.27
221.5
8.72

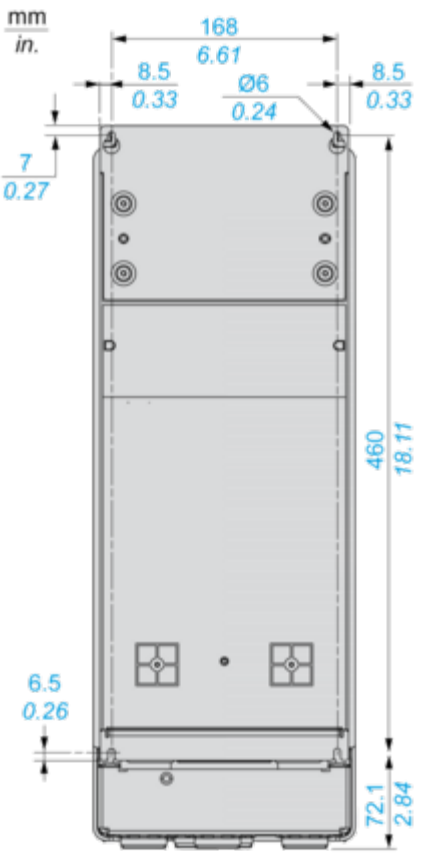
mm
in.
168
6.61
8.5
0.33
Ø6
0.24
8.5
0.33
7
0.27
460
18.11
6.5
0.26
72.1
2.84

## Mounting and Clearance

### Clearances

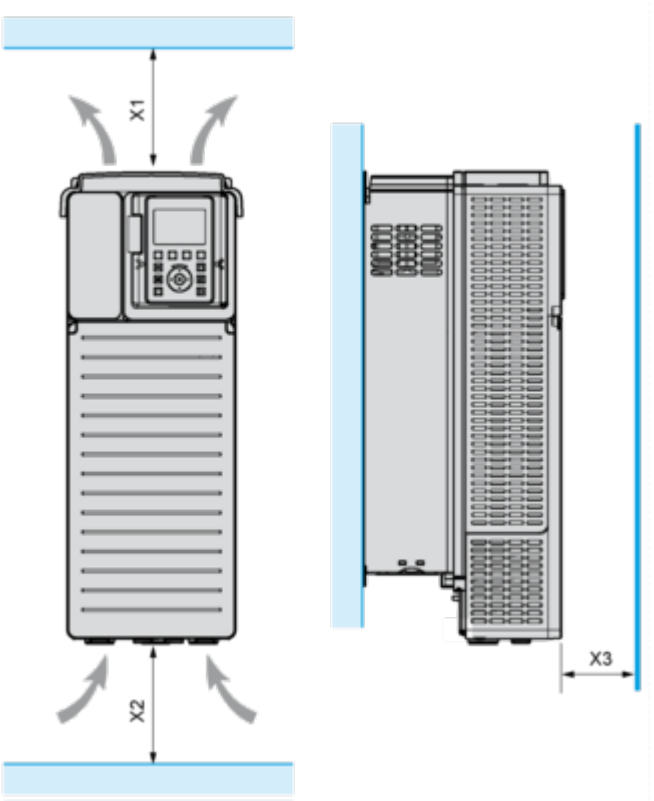


| X1 | X2 | X3 |
|---|---|---|
| ≥ 100 mm (3.94 in.) | ≥ 100 mm (3.94 in.) | ≥ 10 mm (0.39 in.) |

## Mounting Types

### Mounting Type A: Individual IP21

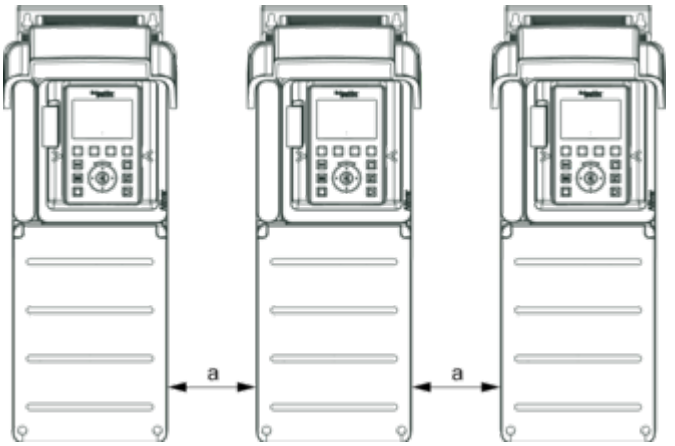


**a ≥** 100 mm (3.94 in.)

### Mounting Type B: Side by Side IP20

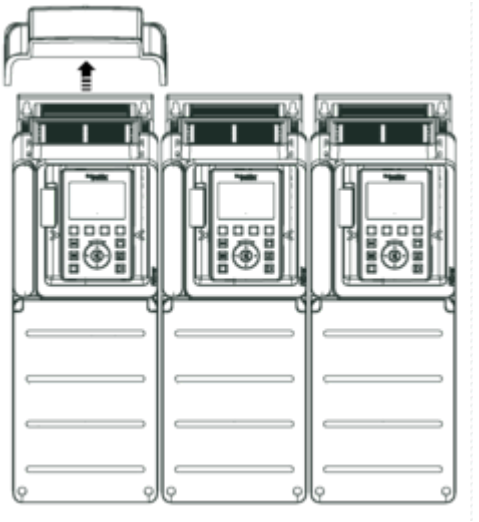

### Mounting Type C: Individual IP20

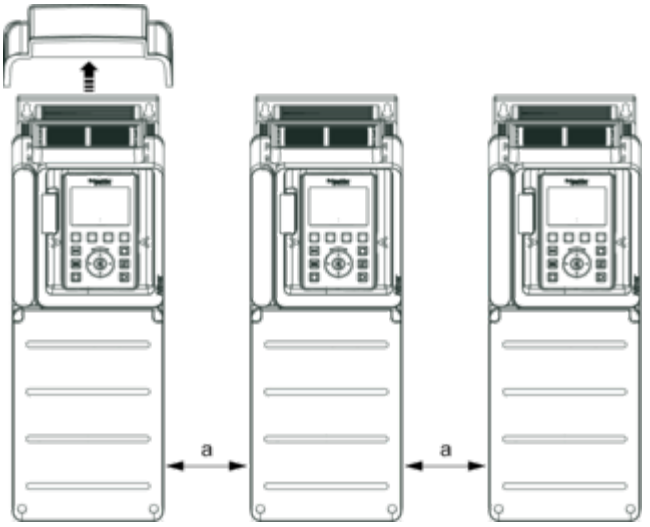


a ≥ 0

## Connections and Schema

### Three-Phase Power Supply with Upstream Breaking via Line Contactor

Connection diagrams conforming to standards EN 954-1 category 1 and IEC/EN 61508 capacity SIL1, stopping category 0 in accordance with standard IEC/EN 60204-1

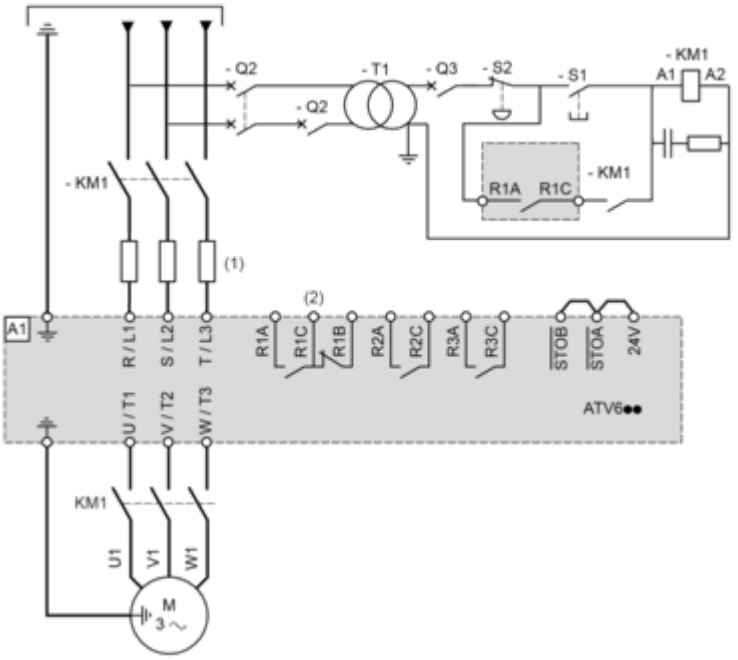


**(1)** Line choke if used
**(2)** Use relay R1 set to operating state Fault to switch Off the product once an error is detected.
**A1 :** Drive
**KM1 :** Line Contactor
**Q2, Q3 :** Circuit breakers
**S1, S2 :** Pushbuttons
**T1 :** Transformer for control part

## Three-Phase Power Supply with Downstream Breaking via Contactor

Connection diagrams conforming to standards EN 954-1 category 1 and IEC/EN 61508 capacity SIL1, stopping category 0 in accordance with standard IEC/EN 60204-1

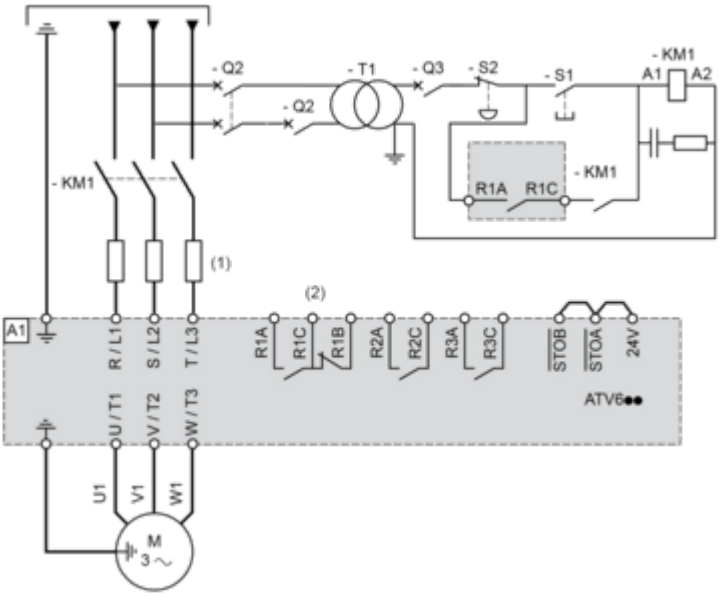


**(1)** Line choke if used
**(2)** Use relay R1 set to operating state Fault to switch Off the product once an error is detected.
**A1 :** Drive
**KM1 :** Contactor

## Control Block Wiring Diagram

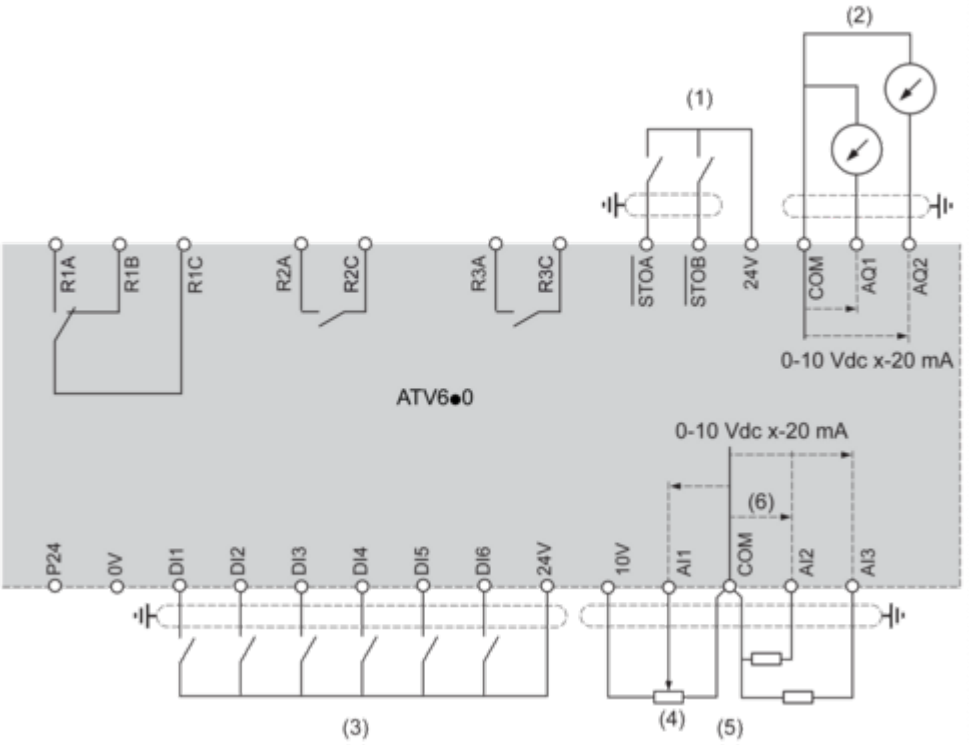


**(1)** Safe Torque Off
**(2)** Analog Output
**(3)** Digital Input
**(4)** Reference potentiometer
**(5)** Analog Input
**R1A, R1B, R1C :** Fault relay
**R2A, R2C :** Sequence relay
**R3A, R3C :** Sequence relay

### Sensor Connection

It is possible to connect either 1 or 3 sensors on terminals AI2 or AI3.

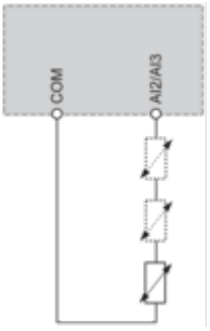

## Sink / Source Switch Configuration

The switch is used to adapt the operation of the logic inputs to the technology of the programmable controller outputs.

- Set the switch to Source (factory setting) if using PLC outputs with PNP transistors.
- Set the switch to Ext if using PLC outputs with NPN transistors.

### Switch Set to SRC (Source) Position Using the Output Power Supply for the Digital Inputs

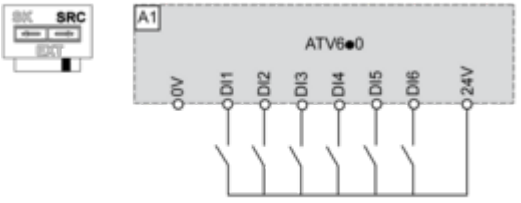


### Switch Set to SRC (Source) Position and Use of an External Power Supply for the DIs

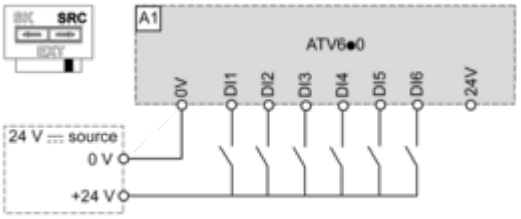


### Switch Set to SK (Sink) Position Using the Output Power Supply for the Digital Inputs

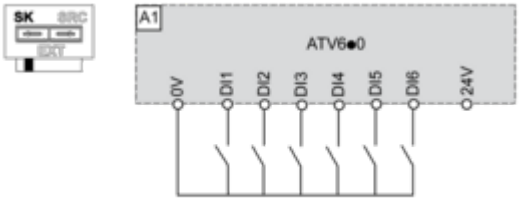


### Switch Set to EXT Position Using an External Power Supply for the DIs

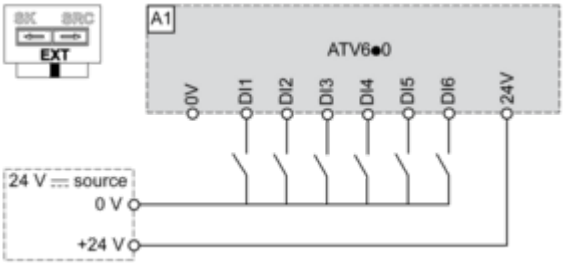

## Performance Curves

### Derating Curves

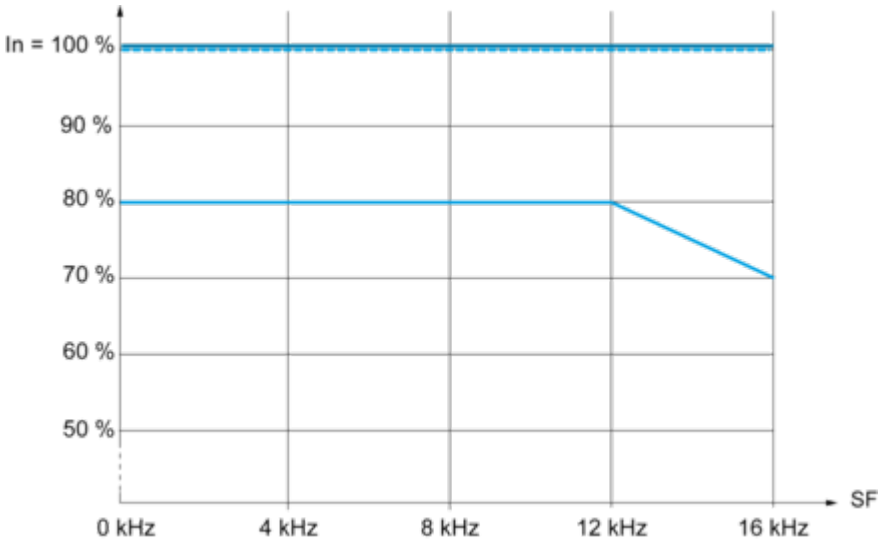


40 °C (104 °F) - Mounting type A, B and C
50 °C (122 °F) - Mounting type A, B and C
60 °C (140 °F) - Mounting type B and C
**In :** Nominal Drive Current
**SF :** Switching Frequency