Product datasheet

Specifications

Green Premium™

Monolithic pilot light, Easy Harmony XA2, plastic, white, 22mm, integral LED, screw clamp terminals, 24V AC DC

XA2EVB1LC

Main

Range Of Product	Easy Harmony XA2
Product Or Component Type	Monolithic pilot light
Device Short Name	XA2
Mounting Diameter	22.5 mm
Shape Of Signaling Unit Head	Round
Cap/Operator Or Lens Colour	White
Light Source	LED
Bulb Base	Integral LED
[Us] Rated Supply Voltage	24 V AC/DC 50/60 Hz

Complementary

Terminals Description Iso N°1	(X1-X2)PL
Device Mounting	Fixing hole 22.3 +0.4/0 conforming to IEC 60947-5-1
Fixing Center	>= 30 x 40 mm (support panel) metal - thickness: 1…6 mm >= 30 x 40 mm (support panel) plastic - thickness: 2…6 mm
Fixing Mode	Fixing nut beneath head recommended torque: 2.2 N.m (+/- 0.2 N.m)
Marking	CE CCC
[Us] Rated Supply Voltage	24 V
Connections - Terminals	Screw clamp terminals, <= 2 x 1.5 mm² with cable end conforming to IEC 60947-1 Screw clamp terminals, 1 x 0.5...1 x 2.5 mm² without cable end conforming to IEC 60947-1
Tightening Torque	0.8…1 N.m conforming to IEC 60947-1
Shape Of Screw Head	Cross compatible with Philips No 2 screwdriver Slotted compatible with flat Ø 4 mm screwdriver Slotted compatible with flat Ø 5.5 mm screwdriver
[Ui] Rated Insulation Voltage	400 V (pollution degree 3) conforming to IEC 60947-1
[Uimp] Rated Impulse Withstand Voltage	6 kV conforming to IEC 60947-1
Signalling Type	Steady
Supply Voltage Limits	0.8…1.2 V AC/DC
Current Consumption	<= 20 mA
Service Life	40000 h at rated voltage and 25 °C
Height	29 mm
Width	29 mm

Disclaimer: This documentation is not intended as a substitute for and is not to be used for determining suitability or reliability of these products for specific user applications

Depth	53 mm
Net Weight	0.02 kg

Environment

Ambient Air Temperature For Storage	-40…70 °C
Ambient Air Temperature For Operation	-25…70 °C
Overvoltage Category	Class I conforming to IEC 536
Ip Degree Of Protection	IP65 conforming to IEC 60529
Ik Degree Of Protection	IK05
Standards	IEC 60947-5-1 GB 14048.1 IEC 60947-1 GB 14048.5 IEC 60529 IEC 50102
Product Certifications	CCC CE
Vibration Resistance	5 gn (f= 12…500 Hz) conforming to IEC 60068-2-6
Shock Resistance	30 gn (duration = 11 ms) for half sine wave acceleration conforming to IEC 60068-2-27

Packing Units

Unit Type Of Package 1	PCE
Number Of Units In Package 1	1
Package 1 Height	2.039 cm
Package 1 Width	2.902 cm
Package 1 Length	5.271 cm
Package 1 Weight	21 g
Unit Type Of Package 2	BB1
Number Of Units In Package 2	10
Package 2 Height	5.8 cm
Package 2 Width	6.4 cm
Package 2 Length	15.8 cm
Package 2 Weight	0.3 kg
Unit Type Of Package 3	S02
Number Of Units In Package 3	160
Package 3 Height	15 cm
Package 3 Width	30 cm
Package 3 Length	40 cm
Package 3 Weight	5.8 kg

Sustainability

Green Premium™ label is Schneider Electric's commitment to delivering products with best-in-class environmental performance. Green Premium promises compliance with the latest regulations, transparency on environmental impacts, as well as circular and low-CO_2 products.

Guide to assessing product sustainability is a white paper that clarifies global eco-label standards and how to interpret environmental declarations.

Learn more about Green Premium >

Guide to assess a product's sustainability >

Transparency RoHS/REACh

Well-being performance

Reach Free Of Svhc	
Toxic Heavy Metal Free	
Mercury Free	
Rohs Exemption Information	Yes

Certifications & Standards

Reach Regulation	REACh Declaration
Eu Rohs Directive	Pro-active compliance (Product out of EU RoHS legal scope) EU RoHS Declaration
China Rohs Regulation	China RoHS declaration
Environmental Disclosure	Product Environmental Profile
Weee	The product must be disposed on European Union markets following specific waste collection and never end up in rubbish bins
Circularity Profile	End of Life Information

Dimensions Drawings

Dimensions

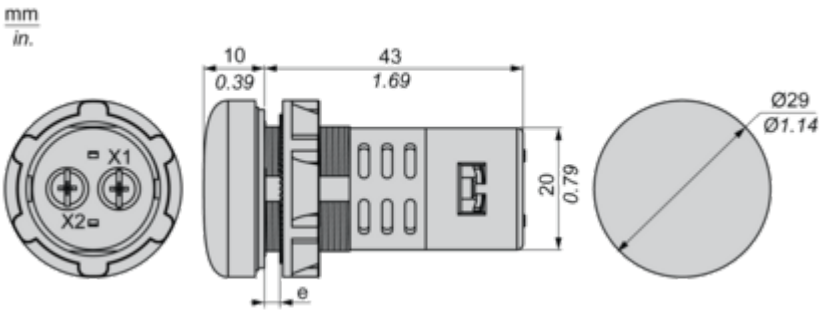

e : Calmping thickness:1 to 6 mm/0.04 to 0.24 in.

Mounting and Clearance

Mounting

Diameter of Finished Fixing Holes

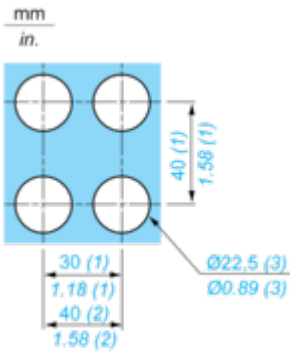

(1) Minimum value.
(2) 40 mm/1.58 in. for Emergency switching off pushbutton only.
(3) Standard value: Ø 22.3 (0; + 0.4) mm/Ø 0.88 (0; + 0.02) in.

Connections and Schema

Wiring Diagram

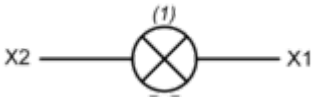

(1) LED