# Product datasheet

Specifications

Green Premium™

## Monolithic pilot light, Easy Harmony XA2, plastic, green, 22mm, integral LED, screw clamp terminals, 220…230V AC, anti interference

XA2EVM3LC

## Main

| | |
|---|---|
| **Range Of Product** | Easy Harmony XA2 |
| **Product Or Component Type** | Monolithic pilot light |
| **Device Short Name** | XA2 |
| **Mounting Diameter** | 22.5 mm |
| **Shape Of Signaling Unit Head** | Round |
| **Cap/Operator Or Lens Colour** | Green |
| **Light Source** | LED |
| **Bulb Base** | Integral LED |
| **[Us] Rated Supply Voltage** | 220...230 V AC 50/60 Hz |

## Complementary

| | |
|---|---|
| **Terminals Description Iso N°1** | (X1-X2)PL |
| **Device Mounting** | Fixing hole 22.3 +0.4/0 conforming to IEC 60947-5-1 |
| **Fixing Center** | >= 30 x 40 mm (support panel) metal - thickness: 1…6 mm<br>>= 30 x 40 mm (support panel) plastic - thickness: 2…6 mm |
| **Fixing Mode** | Fixing nut beneath head recommended torque: 2.2 N.m (+/- 0.2 N.m) |
| **Marking** | CE<br>CCC |
| **[Us] Rated Supply Voltage** | 220...230 V |
| **Connections - Terminals** | Screw clamp terminals, <= 2 x 1.5 mm² with cable end conforming to IEC 60947-1<br>Screw clamp terminals, 1 x 0.5...1 x 2.5 mm² without cable end conforming to IEC 60947-1 |
| **Tightening Torque** | 0.8…1 N.m conforming to IEC 60947-1 |
| **Shape Of Screw Head** | Cross compatible with Philips No 2 screwdriver<br>Slotted compatible with flat Ø 4 mm screwdriver<br>Slotted compatible with flat Ø 5.5 mm screwdriver |
| **[Ui] Rated Insulation Voltage** | 400 V (pollution degree 3) conforming to IEC 60947-1 |
| **[Uimp] Rated Impulse Withstand Voltage** | 6 kV conforming to IEC 60947-1 |
| **Signalling Type** | Steady |
| **Supply Voltage Limits** | 0.8…1.2 V AC |
| **Current Consumption** | <= 20 mA |
| **Service Life** | 40000 h at rated voltage and 25 °C |
| **Height** | 29 mm |

Disclaimer: This documentation is not intended as a substitute for and is not to be used for determining suitability or reliability of these products for specific user applications

| | |
|---|---|
| **Width** | 29 mm |
| **Depth** | 53 mm |
| **Net Weight** | 0.02 kg |

## Environment

| | |
|---|---|
| **Ambient Air Temperature For Storage** | -40…70 °C |
| **Ambient Air Temperature For Operation** | -25…70 °C |
| **Overvoltage Category** | Class I conforming to IEC 536 |
| **Ip Degree Of Protection** | IP65 conforming to IEC 60529 |
| **Ik Degree Of Protection** | IK05 |
| **Standards** | IEC 60947-1<br>IEC 60947-5-1<br>GB 14048.5<br>GB 14048.1<br>IEC 60529<br>IEC 50102 |
| **Product Certifications** | CE<br>CCC |
| **Vibration Resistance** | 5 gn (f= 12…500 Hz) conforming to IEC 60068-2-6 |
| **Shock Resistance** | 30 gn (duration = 11 ms) for half sine wave acceleration conforming to IEC 60068-2-27 |

## Packing Units

| | |
|---|---|
| **Unit Type Of Package 1** | PCE |
| **Number Of Units In Package 1** | 1 |
| **Package 1 Height** | 1.991 cm |
| **Package 1 Width** | 2.934 cm |
| **Package 1 Length** | 5.313 cm |
| **Package 1 Weight** | 0.021 kg |
| **Unit Type Of Package 2** | BB1 |
| **Number Of Units In Package 2** | 10 |
| **Package 2 Height** | 5.8 cm |
| **Package 2 Width** | 6.4 cm |
| **Package 2 Length** | 15.8 cm |
| **Package 2 Weight** | 0.234 kg |
| **Unit Type Of Package 3** | S02 |
| **Number Of Units In Package 3** | 160 |
| **Package 3 Height** | 15 cm |
| **Package 3 Width** | 30 cm |
| **Package 3 Length** | 40 cm |
| **Package 3 Weight** | 4.059 kg |

## Sustainability

**Green Premium™ label** is Schneider Electric's commitment to delivering products with best-in-class environmental performance. Green Premium promises compliance with the latest regulations, transparency on environmental impacts, as well as circular and low-$CO_2$ products.

**Guide to assessing product sustainability** is a white paper that clarifies global eco-label standards and how to interpret environmental declarations.

Learn more about Green Premium >

Guide to assess a product's sustainability >

RoHS/REACh

## Well-being performance

| | |
|---|---|
| Reach Free Of Svhc | |
| Toxic Heavy Metal Free | |
| Mercury Free | |
| Rohs Exemption Information | Yes |

## Certifications & Standards

| | |
|---|---|
| **Reach Regulation** | REACh Declaration |
| **Eu Rohs Directive** | Pro-active compliance (Product out of EU RoHS legal scope)<br>EU RoHS Declaration |
| **China Rohs Regulation** | China RoHS declaration |
| **Weee** | The product must be disposed on European Union markets following specific waste collection and never end up in rubbish bins |

## Dimensions Drawings

### Dimensions

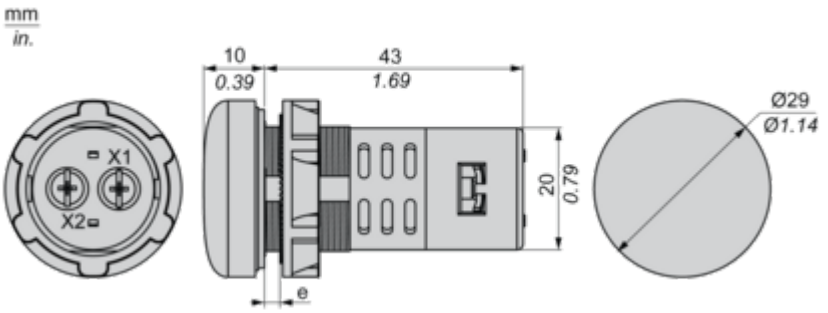


**e :** Calmping thickness:1 to 6 mm/0.04 to 0.24 in.

## Mounting and Clearance

### Mounting

#### Diameter of Finished Fixing Holes

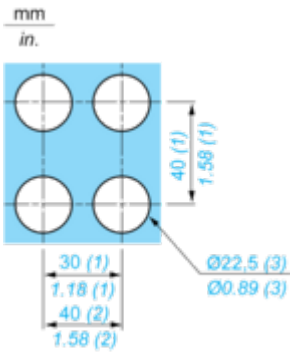


**(1)** Minimum value.
**(2)** 40 mm/1.58 in. for Emergency switching off pushbutton only.
**(3)** Standard value: Ø 22.3 (0; + 0.4) mm/Ø 0.88 (0; + 0.02) in.

## Connections and Schema

### Wiring Diagram

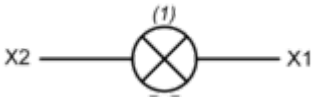


**(1)** LED