Product datasheet

Specifications

Green Premium™

Single foot switch, Harmony XPE, plastic, blue, without cover, 1 step, 2 contacts 1NC+NO, IP66

XPEB211

Discontinued

Main

Range Of Product	Harmony XPE
Product Or Component Type	Foot switch
Material	Plastic
Foot Switch Type	Single foot switch
Device Short Name	XPEB
Trigger Mechanism	Without trigger mechanism
Contact Operation	2 steps
Contacts Type And Composition	2 NC + NO
Colour	Blue

Complementary

Positive Opening	With conforming to EN/IEC 60947-5-1 appendix K
Connections - Terminals	Screw clamp terminal, <= 1 x 2.5 mm² with or without cable end
Cable Entry	2 plain holes for M20 cable gland
Mechanical Durability	10000000 cycles
[Ie] Rated Operational Current	3 A, 240 V, AC-15, A300 0.27 A, 250 V, DC-13, Q300 conforming to EN/IEC 60947-5-1 appendix A
[Ui] Rated Insulation Voltage	300 V conforming to UL 508
[Uimp] Rated Impulse Withstand Voltage	6 kV conforming to EN/IEC 60947-1
Maximum Resistance Across Terminals	25 MOhm conforming to NF C 93-050 method A
Short-Circuit Protection	10 A cartridge fuse type gG conforming to EN/IEC 60947-5-1
Rated Operational Power In W	10 W DC-13, operating rate <60 cyc/mn, 5000000 cycles, 24 V, load factor: 0.5 conforming to EN/IEC 60947-5-1 appendix C
Net Weight	0.57 kg

Environment

Standards	CSA C22.2 No 14
Product Certifications	CSA
Protective Treatment	TH
Ambient Air Temperature For Operation	-25…70 °C
Ambient Air Temperature For Storage	-40…70 °C

Disclaimer: This documentation is not intended as a substitute for and is not to be used for determining suitability or reliability of these products for specific user applications

Vibration Resistance	5 gn (f= 10…500 Hz) conforming to IEC 60068-2-6
Shock Resistance	30 gn conforming to IEC 60068-2-27
Overvoltage Category	Class II conforming to NF C 20-030
Ip Degree Of Protection	IP66 conforming to IEC 60529

Packing Units

Unit Type Of Package 1	PCE
Number Of Units In Package 1	1
Package 1 Height	8.5 cm
Package 1 Width	17.0 cm
Package 1 Length	28.5 cm
Package 1 Weight	841.0 g
Unit Type Of Package 2	S04
Number Of Units In Package 2	12
Package 2 Height	30.0 cm
Package 2 Width	40.0 cm
Package 2 Length	60.0 cm
Package 2 Weight	10.947 kg

Contractual warranty

Warranty	18 months

Sustainability

Green Premium™ label is Schneider Electric's commitment to delivering products with best-in-class environmental performance. Green Premium promises compliance with the latest regulations, transparency on environmental impacts, as well as circular and low-CO_2 products.

Guide to assessing product sustainability is a white paper that clarifies global eco-label standards and how to interpret environmental declarations.

Learn more about Green Premium >

Guide to assess a product's sustainability >

Transparency RoHS/REACh

Well-being performance

Mercury Free

Rohs Exemption Information	Yes

Certifications & Standards

Reach Regulation	REACh Declaration
Eu Rohs Directive	Pro-active compliance (Product out of EU RoHS legal scope)
China Rohs Regulation	China RoHS declaration
Environmental Disclosure	Product Environmental Profile
Weee	The product must be disposed on European Union markets following specific waste collection and never end up in rubbish bins
Circularity Profile	No need of specific recycling operations Circularity Profile

Dimensions Drawings

Plastic Foot Switch without Protective Cover

Dimensions

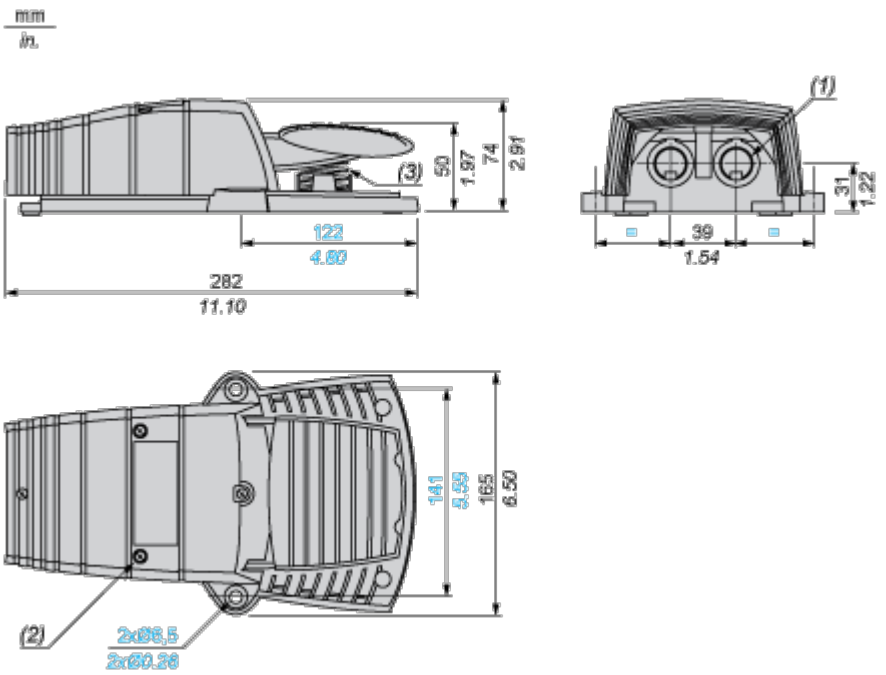

(1) 2 plain holes for ISO M20 or n° 13 (Pg 13.5) cable gland.

(2) 4 cover fixing screws: stainless steel. Tightening torque: 1 N.m.

(3) Return spring: stainless steel.

Performance Curves

Electrical Durability of Contacts

AC-15 Utilization Category

Operating rate: 3600 operating cycles/hour. Load factor: 0.5.
Inductive circuit:

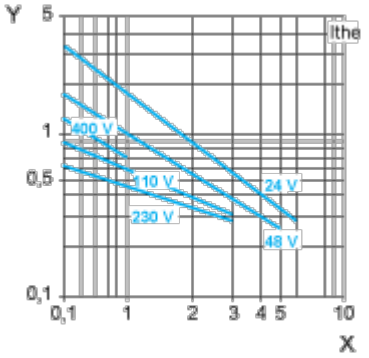

X Current in A

Y Millions of operating cycles

DC-13 Utilization Category

Refer to the product characteristic “Operational power in W”.