Product datasheet

Specifications

Green Premium™

Editable voice alarms, Harmony XVS, black, mounting 72mm DIN rail, PNP, 12...24V DC

XVSV7BBP

Main

Range Of Product	Harmony XVS
Product Or Component Type	Editable electronic alarm
Beacon Or Indicator Bank Unit Type	Sound unit
Device Short Name	XVSV

Complementary

Colour	Dark grey
Input Type	Bit: 6 channel input Binary: 63 channel input
Assembly Style	Ready assembled
Material	PC (polycarbonate): body PC (polycarbonate): back cover TPE (thermoplastic elastomer): front panel NBR (nitrile butadiene rubber)
Marking	CE
Overvoltage Category	Class II conforming to EN/IEC 61140
Mounting Support	72 mm DIN rail
[Us] Rated Supply Voltage	12...24 V DC
[Ue] Rated Operational Voltage	10...30 V DC
[Ui] Rated Insulation Voltage	250 V
Inrush Current	30 A
Associated Fuse Rating	1 A
[Uimp] Rated Impulse Withstand Voltage	2.5 kV conforming to IEC 60947-1
Power Consumption In W	1.8 W
Current Consumption	75 mA at 24 V DC
Clamping Connection Capacity	<= 1 x 1.5 mm²
Device Application	Printing Packaging Subway
Mounting Diameter	80 mm
Width	80 mm
Height	80 mm
Depth	24.9 mm
Net Weight	0.142 kg

Disclaimer: This documentation is not intended as a substitute for and is not to be used for determining suitability or reliability of these products for specific user applications

Environment

Discrete Output Type	PNP
Signalling Type	Adjustable vocal sound
Standards	EN/IEC 60947-5-1
Protective Treatment	TC
Ambient Air Temperature For Storage	-20…60 °C
Ambient Air Temperature For Operation	-10…55 °C
Pollution Degree	2
Relative Humidity	35…85 % without condensation
Vibration Resistance	7 gn
Ip Degree Of Protection	Panel mounted: IP65 conforming to EN/IEC 60529 Wall mounted: IP20
Noise Level	0…89 dB (stop or suppress) at 1 m

Packing Units

Unit Type Of Package 1	PCE
Number Of Units In Package 1	1
Package 1 Height	11.5 cm
Package 1 Width	13.0 cm
Package 1 Length	7.0 cm
Package 1 Weight	318.0 g
Unit Type Of Package 2	S02
Number Of Units In Package 2	10
Package 2 Height	15 cm
Package 2 Width	30 cm
Package 2 Length	40 cm
Package 2 Weight	3.635 kg
Unit Type Of Package 3	P06
Number Of Units In Package 3	160
Package 3 Height	75 cm
Package 3 Width	40 cm
Package 3 Length	80 cm
Package 3 Weight	75.88 kg

Sustainability

Green Premium™ label is Schneider Electric's commitment to delivering products with best-in-class environmental performance. Green Premium promises compliance with the latest regulations, transparency on environmental impacts, as well as circular and low-CO_2 products.

Guide to assessing product sustainability is a white paper that clarifies global eco-label standards and how to interpret environmental declarations.

Learn more about Green Premium >

Guide to assess a product's sustainability >

Transparency RoHS/REACh

Well-being performance

Mercury Free

Rohs Exemption Information	Yes

Certifications & Standards

Reach Regulation	REACh Declaration
Eu Rohs Directive	Pro-active compliance (Product out of EU RoHS legal scope)
China Rohs Regulation	China RoHS declaration
Environmental Disclosure	Product Environmental Profile
Circularity Profile	End of Life Information

Dimensions Drawings

Dimensions

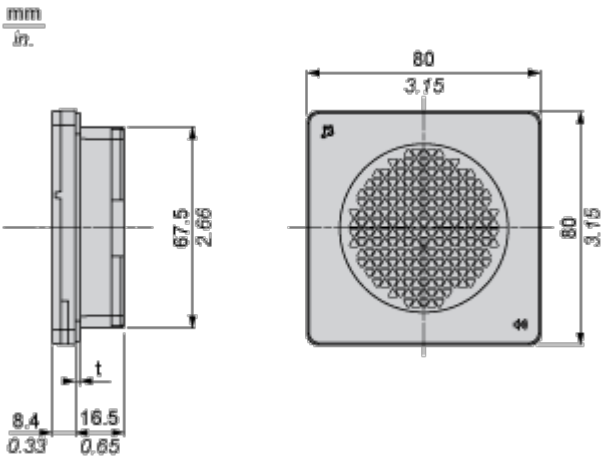

(t) : Waterproof rubber (1.6 mm / 0.06 in.)

Mounting and Clearance

Panel Cut Dimensions

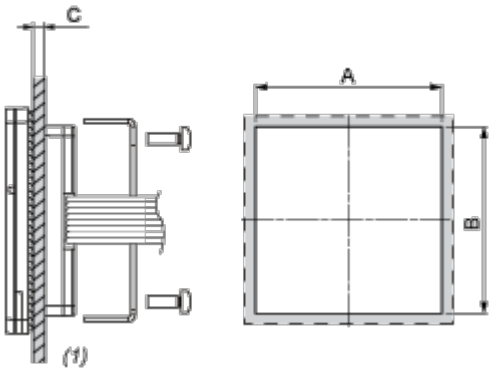

(1) Installation panel

A	B	C
68 +0.5/0 mm (2.68 +0.0197/0 in.)	68 +0.5/0 mm (2.68 +0.0197/0 in.)	1...4 mm (0.04...0.15 in.)

Wall Mount Dimensions

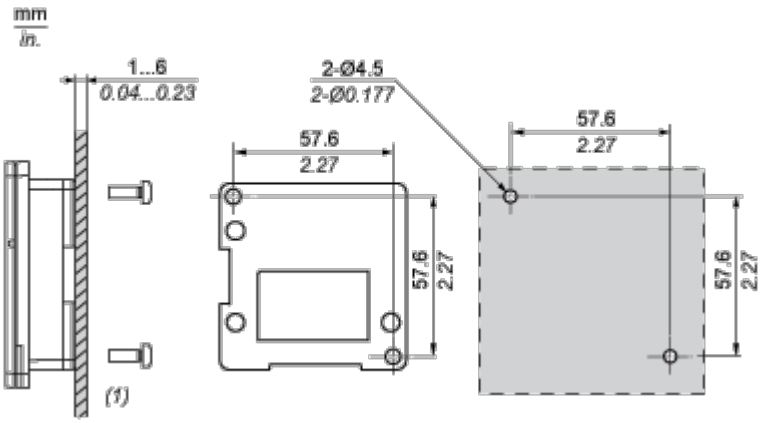

(1) Installation panel

Connections and Schema

Wiring Diagram

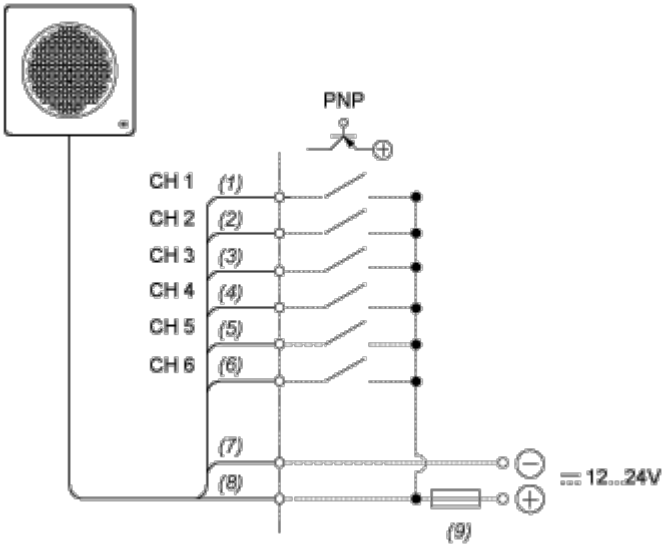

(1) Green

(2) Yellow

(3) Brown

(4) Blue

(5) Purple

(6) Gray

(7) Black

(8) Red

(9) Fuse (Rated current:1 A)