# Product datasheet

Specifications

Green Premium™

## Editable voice alarms, Harmony XVS, white, mounting 96mm DIN rail, NPN, 100...230V AC

XVSV9MWN

## Main

| | |
|---|---|
| **Range Of Product** | Harmony XVS |
| **Product Or Component Type** | Editable electronic alarm |
| **Beacon Or Indicator Bank Unit Type** | Sound unit |
| **Device Short Name** | XVSV |

## Complementary

| | |
|---|---|
| **Colour** | White |
| **Input Type** | Bit: 6 channel input<br>Binary: 63 channel input |
| **Assembly Style** | Ready assembled |
| **Material** | PC (polycarbonate): body<br>PC (polycarbonate): back cover<br>TPE (thermoplastic elastomer): front panel<br>NBR (nitrile butadiene rubber) |
| **Marking** | CE |
| **Overvoltage Category** | Class II conforming to IEC 61140 |
| **Mounting Support** | 96 mm DIN rail |
| **[Us] Rated Supply Voltage** | 100...230 V AC |
| **[Ue] Rated Operational Voltage** | 90...264 V AC |
| **[Ui] Rated Insulation Voltage** | 250 V |
| **Inrush Current** | 30 A |
| **Associated Fuse Rating** | 1 A |
| **[Uimp] Rated Impulse Withstand Voltage** | 2.5 kV conforming to IEC 60947-1 |
| **Power Consumption In W** | 10 W |
| **Current Consumption** | 100 mA at 100 V AC |
| **Clamping Connection Capacity** | <= 1 x 1.5 mm² |
| **Device Application** | Packaging<br>Subway<br>Printing |
| **Mounting Diameter** | 105 mm |
| **Width** | 105 mm |
| **Height** | 105 mm |
| **Depth** | 50.1 mm |
| **Net Weight** | 0.287 kg |

Disclaimer: This documentation is not intended as a substitute for and is not to be used for determining suitability or reliability of these products for specific user applications

## Environment

| | |
|---|---|
| **Discrete Output Type** | NPN |
| **Signalling Type** | Adjustable vocal sound |
| **Standards** | IEC 60947-5-1 |
| **Protective Treatment** | TC |
| **Ambient Air Temperature For Storage** | -20…60 °C |
| **Ambient Air Temperature For Operation** | 0…50 °C |
| **Pollution Degree** | 2 |
| **Relative Humidity** | 35…85 % without condensation |
| **Vibration Resistance** | 7 gn |
| **Ip Degree Of Protection** | Panel mounted: IP65 conforming to IEC 60529<br>Wall mounted: IP20 |
| **Noise Level** | 0…97 dB (stop or suppress) at 1 m |

## Packing Units

| | |
|---|---|
| **Unit Type Of Package 1** | PCE |
| **Number Of Units In Package 1** | 1 |
| **Package 1 Height** | 10.5 cm |
| **Package 1 Width** | 5 cm |
| **Package 1 Length** | 10.5 cm |
| **Package 1 Weight** | 287 g |

## Sustainability

**Green Premium™ label** is Schneider Electric's commitment to delivering products with best-in-class environmental performance. Green Premium promises compliance with the latest regulations, transparency on environmental impacts, as well as circular and low-$CO_2$ products.

**Guide to assessing product sustainability** is a white paper that clarifies global eco-label standards and how to interpret environmental declarations.

Learn more about Green Premium >

Guide to assess a product's sustainability >

Transparency RoHS/REACh

## Well-being performance

Mercury Free

| | |
|---|---|
| Rohs Exemption Information | Yes |

## Certifications & Standards

| | |
|---|---|
| **Reach Regulation** | REACh Declaration |
| **Eu Rohs Directive** | Pro-active compliance (Product out of EU RoHS legal scope) |
| **China Rohs Regulation** | China RoHS declaration |
| **Environmental Disclosure** | Product Environmental Profile |
| **Circularity Profile** | End of Life Information |

## Dimensions Drawings

### Dimensions

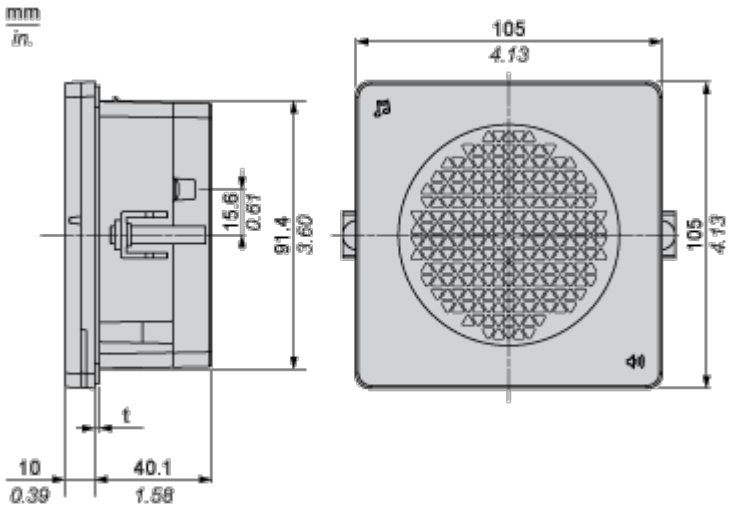


(t) : Waterproof rubber (1.6 mm / 0.06 in.)

## Mounting and Clearance

### Panel Cut Dimensions

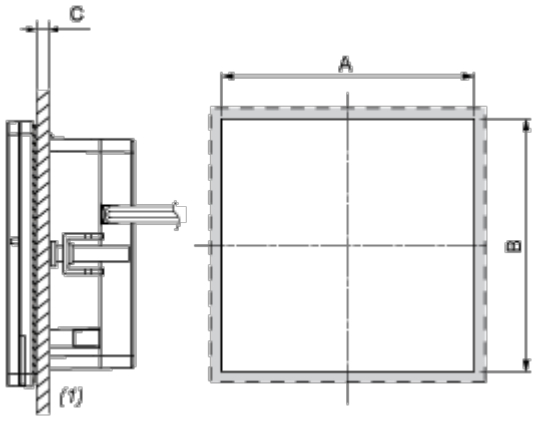


(1) Installation panel

| A | B | C |
|---|---|---|
| 92 +0.6/0 mm (3.62 +0.0236/0 in.) | 92 +0.6/0 mm (3.62 +0.0236/0 in.) | 1...4 mm (0.04...0.15 in.) |

## Wall Mount Dimensions

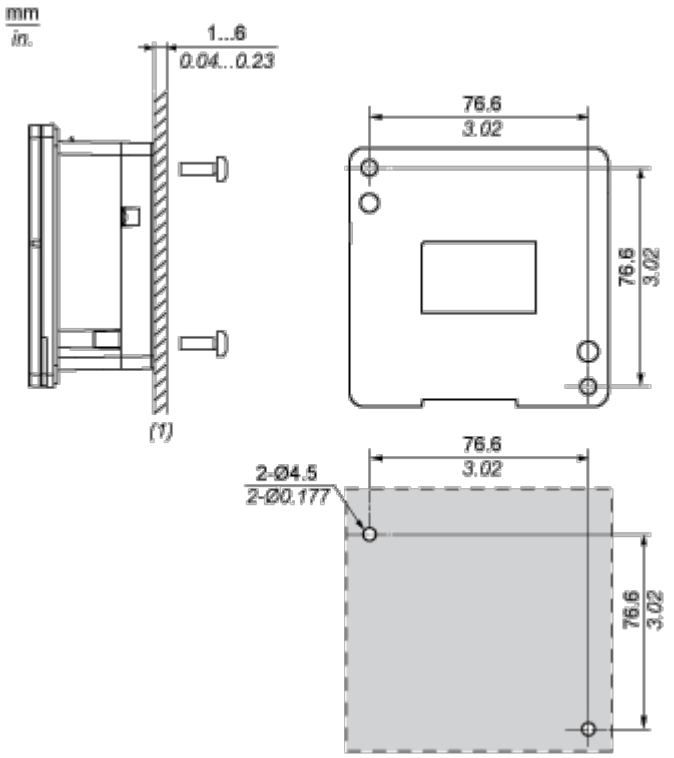


(1) Installation panel

## Connections and Schema

### Wiring Diagram

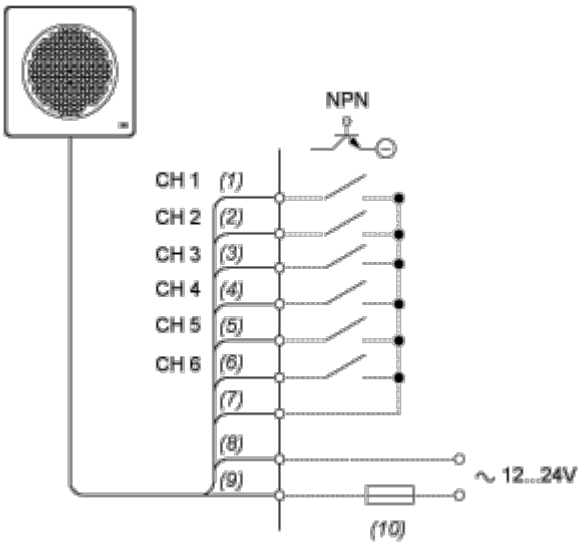


(1) Green

(2) Yellow

(3) Brown

(4) Blue

(5) Purple

(6) Gray

(7) White

(8) Black

(9) Red

(10) Fuse (Rated current:1 A)