Product datasheet

Specifications

Green Premium™

variable speed drive, Easy Altivar 310, 11kW, 15hp, 380 to 460V, 3 phase, without filter

ATV310HD11N4E

Main

Range Of Product	Easy Altivar 310
Product Or Component Type	Variable speed drive
Product Specific Application	Simple machine
Assembly Style	With heat sink
Device Short Name	ATV310
Network Number Of Phases	Three phase
[Us] Rated Supply Voltage	380...460 V - 15...10 %
Motor Power Kw	11 kW for heavy duty 15 kW for normal duty
Motor Power Hp	15 hp for heavy duty 20 hp for normal duty
Noise Level	50 dB

Complementary

Quantity Per Set	Set of 1
Emc Filter	Without EMC filter
Type Of Cooling	Integrated fan
Communication Port Protocol	Modbus
Connector Type	RJ45 (on front face) for Modbus
Physical Interface	2-wire RS 485 for Modbus
Transmission Frame	RTU for Modbus
Transmission Rate	4800 bit/s 9600 bit/s 19200 bit/s 38400 bit/s
Number Of Addresses	1…247 for Modbus
Communication Service	Read holding registers (03) 29 words Write single register (06) 29 words Write multiple registers (16) 27 words Read/write multiple registers (23) 4/4 words Read device identification (43)
Line Current	36.1 A at 380 V (heavy duty) 38.6 A at 380 V (normal duty) 30.4 A at 460 V (heavy duty) 32.5 A at 460 V (normal duty)
Apparent Power	24.2 kVA at 460 V (heavy duty) 25.4 kVA at 460 V (normal duty)

Disclaimer: This documentation is not intended as a substitute for and is not to be used for determining suitability or reliability of these products for specific user applications

Prospective Line Isc	22 kA (heavy duty) 5 kA (normal duty)
Continuous Output Current	24 A heavy duty 30 A normal duty
Maximum Transient Current	36 A during 60 s (heavy duty) 33 A during 60 s (normal duty)
Power Dissipation In W	337.1 W, at In (heavy duty) 407.0 W, at In (normal duty)
Speed Drive Output Frequency	0.5…400 Hz
Nominal Switching Frequency	4 kHz
Switching Frequency	2...12 kHz adjustable
Speed Range	1…20 for asynchronous motor
Transient Overtorque	170…200 % of nominal motor torque depending on drive rating and type of motor
Braking Torque	Up to 150 % of nominal motor torque with braking resistor Up to 70 % of nominal motor torque without braking resistor
Asynchronous Motor Control Profile	Voltage/frequency ratio (V/f) Voltage/frequency ratio - Energy Saving, quadratic U/f Sensorless vector control (SVC)
Motor Slip Compensation	Adjustable
Output Voltage	380...460 V three phase
Electrical Connection	Terminal, clamping capacity: 10 mm², AWG 10 (L1, L2, L3, PA/+, PB, U, V, W)
Tightening Torque	2.2…2.4 N.m
Insulation	Electrical between power and control
Supply	Internal supply for reference potentiometer: 5 V (4.75…5.25 V)DC, <10 mA with overload and short-circuit protection Internal supply for logic inputs: 24 V (20.4…28.8 V)DC, <100 mA with overload and short-circuit protection
Analogue Input Number	1
Analogue Input Type	Configurable current AI1 0...20 mA 250 Ohm Configurable voltage AI1 0...10 V 30 kOhm Configurable voltage AI1 0...5 V 30 kOhm
Discrete Input Number	4
Discrete Input Type	Programmable LI1...LI4 24 V 18...30 V
Discrete Input Logic	Negative logic (sink), > 16 V (state 0), < 10 V (state 1), input impedance 3.5 kOhm Positive logic (source), 0...< 5 V (state 0), > 11 V (state 1)
Sampling Duration	10 ms for analogue input 20 ms, tolerance +/- 1 ms for logic input
Linearity Error	+/- 0.3 % of maximum value for analogue input
Analogue Output Number	1
Analogue Output Type	AO1 software-configurable voltage: 0...10 V AC 0...10 V 0…0.02 A, impedance: 470 Ohm, resolution 8 bits AO1 software-configurable current: 0...20 mA, impedance: 800 Ohm, resolution 8 bits
Discrete Output Number	2
Discrete Output Type	Logic output LO+, LO- Protected relay output R1A, R1B, R1C 1 C/O
Minimum Switching Current	5 mA at 24 V DC for logic relay
Maximum Switching Current	2 A at 250 V AC on inductive load cos phi = 0.4 L/R = 7 ms for logic relay 2 A at 30 V DC on inductive load cos phi = 0.4 L/R = 7 ms for logic relay 3 A at 250 V AC on resistive load cos phi = 1 L/R = 0 ms for logic relay 4 A at 30 V DC on resistive load cos phi = 1 L/R = 0 ms for logic relay

Acceleration And Deceleration Ramps	Linear from 0...999.9 s S U
Braking To Standstill	By DC injection, <30 s
Protection Type	Line supply overvoltage Line supply undervoltage Overcurrent between output phases and earth Overheating protection Short-circuit between motor phases Against input phase loss in three-phase Thermal motor protection via the drive by continuous calculation of I²t
Frequency Resolution	Analog input: converter A/D, 10 bits Display unit: 0.1 Hz
Time Constant	20 ms +/- 1 ms for reference change
Operating Position	Vertical +/- 10 degree
Height	232 mm
Width	150 mm
Depth	171 mm
Net Weight	3.7 kg
Supply Frequency	50/60 Hz +/- 5 %
Product Destination	Asynchronous motors

Environment

Electromagnetic Compatibility	Electrical fast transient/burst immunity test - test level: level 4 conforming to IEC 61000-4-4 Electrostatic discharge immunity test - test level: level 3 conforming to IEC 61000-4-2 Immunity to conducted disturbances - test level: level 3 conforming to IEC 61000-4-6 Radiated radio-frequency electromagnetic field immunity test - test level: level 3 conforming to IEC 61000-4-3 Voltage dips and interruptions immunity test conforming to IEC 61000-4-11 Surge immunity test - test level: level 3 conforming to IEC 61000-4-5
Standards	IEC 61800-5-1 IEC 61800-3
Product Certifications	CE EAC KC
Ip Degree Of Protection	IP20 without blanking plate on upper part IP4X top
Pollution Degree	2 conforming to IEC 61800-5-1
Environmental Characteristic	Dust pollution resistance class 3S2 conforming to IEC 60721-3-3 Chemical pollution resistance class 3C3 conforming to IEC 60721-3-3
Shock Resistance	15 gn conforming to IEC 60068-2-27 for 11 ms
Relative Humidity	5…95 % without condensation conforming to IEC 60068-2-3 5…95 % without dripping water conforming to IEC 60068-2-3
Ambient Air Temperature For Storage	-25…70 °C
Ambient Air Temperature For Operation	-10…55 °C without derating 55…60 °C protective cover from the top of the drive removed with current derating 2.2 % per °C
Operating Altitude	<= 1000 m without derating

Packing Units

Unit Type Of Package 1	PCE
Number Of Units In Package 1	1

Package 1 Height	23.11 cm
Package 1 Width	20.07 cm
Package 1 Length	26.92 cm
Package 1 Weight	4.24 kg
Unit Type Of Package 2	S04
Number Of Units In Package 2	2
Package 2 Height	30 cm
Package 2 Width	40 cm
Package 2 Length	60 cm
Package 2 Weight	10.532 kg
Unit Type Of Package 3	P06
Number Of Units In Package 3	27
Package 3 Height	100.8 cm
Package 3 Width	60 cm
Package 3 Length	80 cm
Package 3 Weight	112.59 kg

Sustainability

Green Premium™ label is Schneider Electric's commitment to delivering products with best-in-class environmental performance. Green Premium promises compliance with the latest regulations, transparency on environmental impacts, as well as circular and low-CO_2 products.

Guide to assessing product sustainability is a white paper that clarifies global eco-label standards and how to interpret environmental declarations.

Learn more about Green Premium >

Guide to assess a product's sustainability >

Transparency RoHS/REACh

Well-being performance

Mercury Free

Rohs Exemption Information	Yes

Certifications & Standards

Reach Regulation	REACh Declaration
Eu Rohs Directive	Compliant with Exemptions
China Rohs Regulation	China RoHS declaration
Environmental Disclosure	Product Environmental Profile
Weee	The product must be disposed on European Union markets following specific waste collection and never end up in rubbish bins
Circularity Profile	End of Life Information

Dimensions Drawings

Dimensions

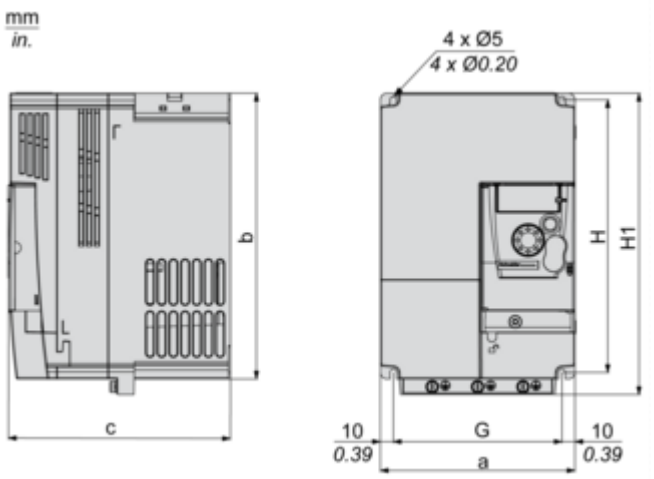

Dimensions in mm

a	b	c	G	H	H1	Ø	For screws
150	220	171	130	210	232	5	M4

Dimensions in in.

a	b	c	G	H	H1	Ø	For screws
5.91	8.66	6.73	5.12	8.27	9.13	0.20	M4

Mounting and Clearance

Mounting Recommendations

Clearance

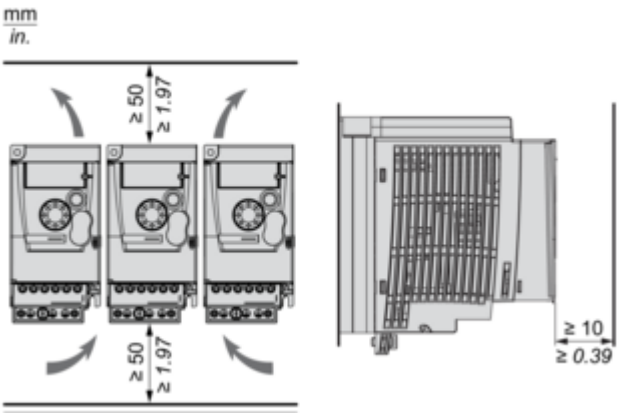

Mounting Types

Mounting Type A

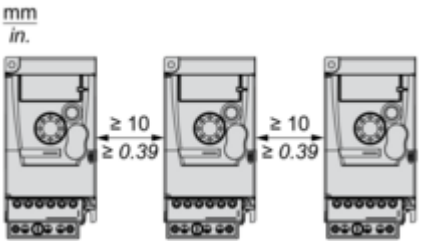

Mounting Type B

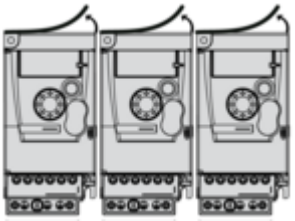

Remove the protective cover from the top of the drive.

Connections and Schema

Three-Phase Power Supply Wiring Diagram

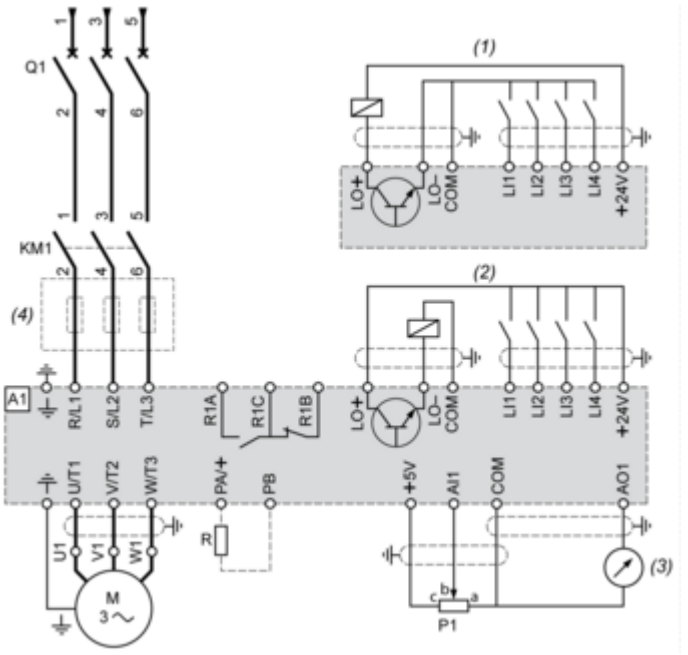

A1 : Drive
KM1 : Contactor (only if a control circuit is needed)
P1 : 2.2 kΩ reference potentiometer. This can be replaced by a 10 kΩ potentiometer (maximum).
Q1 : Circuit breaker
R : Braking resistor (optional)
(1) Negative logic (Sink)
(2) Positive logic (Source) (factory set configuration)
(3) 0...10 V or 0...20 mA
(4) Line choke three-phase (optional)