Product datasheet

Specifications

Green Premium™

variable speed drive, Easy Altivar 610, 18.5kW, 25hp, 380 to 460V, IP20

ATV610D18N4

Main

Range Of Product	Easy Altivar 610
Product Or Component Type	Variable speed drive
Product Specific Application	Fan, pump, compressor, conveyor
Device Short Name	ATV610
Variant	Standard version
Product Destination	Asynchronous motors Synchronous motors
Mounting Mode	Cabinet mount
Emc Filter	Integrated conforming to IEC 61800-3 category C3 with 50 m
Ip Degree Of Protection	IP20
Type Of Cooling	Forced convection
Supply Frequency	50...60 Hz +/-5 %
Network Number Of Phases	3 phases
[Us] Rated Supply Voltage	380...460 V - 15...10 %
Motor Power Kw	18.5 kW for normal duty 15 kW for heavy duty
Motor Power Hp	25 hp for normal duty 20 hp for heavy duty
Line Current	37.2 A at 380 V (normal duty) 33.5 A at 460 V (normal duty) 31.6 A at 380 V (heavy duty) 28.3 A at 460 V (heavy duty)
Prospective Line Isc	22 kA
Apparent Power	26.7 kVA at 460 V (normal duty) 22.6 kVA at 460 V (heavy duty)
Continuous Output Current	39.2 A at 4 kHz for normal duty 31.7 A at 4 kHz for heavy duty
Maximum Transient Current	43.1 A during 60 s (normal duty) 47.6 A during 60 s (heavy duty)
Asynchronous Motor Control Profile	Variable torque standard Optimized torque mode Constant torque standard
Output Frequency	0.1…500 Hz
Nominal Switching Frequency	4 kHz
Switching Frequency	2...12 kHz adjustable
Number Of Preset Speeds	16 preset speeds

Disclaimer: This documentation is not intended as a substitute for and is not to be used for determining suitability or reliability of these products for specific user applications

Communication Port Protocol	Modbus serial
Option Card	Slot A: communication card, Profibus DP V1 Slot A: digital or analog I/O extension card Slot A: relay output card

Complementary

Output Voltage	<= power supply voltage
Motor Slip Compensation	Can be suppressed Automatic whatever the load Adjustable Not available in permanent magnet motor law
Acceleration And Deceleration Ramps	Linear adjustable separately from 0.01 to 9000 s S, U or customized
Braking To Standstill	By DC injection
Protection Type	Thermal protection: motor Motor phase break: motor Thermal protection: drive Overheating: drive Overcurrent between output phases and earth: drive Overload of output voltage: drive Short-circuit protection: drive Motor phase break: drive Overvoltages on the DC bus: drive Line supply overvoltage: drive Line supply undervoltage: drive Line supply phase loss: drive Overspeed: drive Break on the control circuit: drive
Frequency Resolution	Display unit: 0.1 Hz Analog input: 0.012/50 Hz
Electrical Connection	Control, screw terminals: 0.5...1.5 mm² Line side, screw terminal: 10...16 mm² Motor, screw terminal: 10...16 mm²
Connector Type	1 RJ45 (on the remote graphic terminal) for Modbus serial
Physical Interface	2-wire RS 485 for Modbus serial
Transmission Frame	RTU for Modbus serial
Transmission Rate	4.8, 9.6, 19.2, 38.4 kbit/s for Modbus serial
Type Of Polarization	No impedance for Modbus serial
Number Of Addresses	1…247 for Modbus serial
Method Of Access	Slave
Supply	External supply for digital inputs: 24 V DC (19…30 V), <1.25 mA, protection type: overload and short-circuit protection Internal supply for reference potentiometer (1 to 10 kOhm): 10.5 V DC +/- 5 %, <10 mA, protection type: overload and short-circuit protection
Local Signalling	2 LEDs for local diagnostic 1 LED (yellow) for embedded communication status 2 LEDs (dual colour) for communication module status 1 LED (red) for presence of voltage
Width	211 mm
Height	495 mm 580 mm with EMC plate
Depth	232 mm
Net Weight	13.5 kg
Analogue Input Number	3

Analogue Input Type	AI1, AI2, AI3 software-configurable voltage: 0...10 V DC, impedance: 30 kOhm, resolution 12 bits AI1, AI2, AI3 software-configurable current: 0...20 mA, impedance: 250 Ohm, resolution 12 bits AI2, AI3 software-configurable temperature probe or water level sensor
Discrete Input Number	6
Discrete Input Type	DI1...DI6 programmable as logic input, 24 V DC (<= 30 V), impedance: 3.5 kOhm DI5, DI6 programmable as pulse input: 0…30 kHz, 24 V DC (<= 30 V)
Input Compatibility	DI1...DI6: logic input level 1 PLC conforming to IEC 61131-2 DI5, DI6: pulse input level 1 PLC conforming to IEC 65A-68
Discrete Input Logic	Positive logic (source): DI1...DI6 configurable logic input, < 5 V (state 0), > 11 V (state 1) Negative logic (sink): DI1...DI6 configurable logic input, > 16 V (state 0), < 10 V (state 1) Positive logic (source): DI5, DI6 configurable pulse input, < 0.6 V (state 0), > 2.5 V (state 1)
Analogue Output Number	2
Analogue Output Type	Software-configurable current AQ1, AQ2: 0...20 mA, resolution 10 bits Software-configurable voltage AQ1, AQ2: 0...10 V DC impedance 470 Ohm, resolution 10 bits
Sampling Duration	5 ms +/- 0.1 ms (AI1, AI2, AI3) - analog input 2 ms +/- 0.5 ms (DI1...DI6)configurable - discrete input 5 ms +/- 1 ms (DI5, DI6)configurable - pulse input 10 ms +/- 1 ms (AQ1, AQ2) - analog output
Accuracy	+/- 0.6 % AI1, AI2, AI3 for a temperature variation 60 °C analog input +/- 1 % AQ1, AQ2 for a temperature variation 60 °C analog output
Linearity Error	AI1, AI2, AI3: +/- 0.15 % of maximum value for analog input AQ1, AQ2: +/- 0.2 % for analog output
Relay Output Number	3
Relay Output Type	Configurable relay logic R1: fault relay NO/NC electrical durability 100000 cycles Configurable relay logic R2: sequence relay NO electrical durability 100000 cycles Configurable relay logic R3: sequence relay NO electrical durability 100000 cycles
Refresh Time	Relay output (R1, R2, R3): 5 ms (+/- 0.5 ms)
Minimum Switching Current	Relay output R1, R2, R3: 5 mA at 24 V DC
Maximum Switching Current	Relay output R1, R2, R3 on resistive load, cos phi = 1: 3 A at 250 V AC Relay output R1, R2, R3 on resistive load, cos phi = 1: 3 A at 30 V DC Relay output R1, R2, R3 on inductive load, cos phi = 0.4 and L/R = 7 ms: 2 A at 250 V AC Relay output R1, R2, R3 on inductive load, cos phi = 0.4 and L/R = 7 ms: 2 A at 30 V DC
Isolation	Between power and control terminals
Insulation Resistance	> 1 MOhm 500 V DC for 1 minute to earth

Environment

Noise Level	65 dB conforming to 86/188/EEC
Power Dissipation In W	410 W(forced convection) at 380 V, switching frequency 4 kHz 64 W(natural convection) at 380 V, switching frequency 4 kHz
Volume Of Cooling Air	215 m3/h
Operating Position	Vertical +/- 10 degree
Electromagnetic Compatibility	Electrostatic discharge immunity test level 3 conforming to IEC 61000-4-2 Radiated radio-frequency electromagnetic field immunity test level 3 conforming to IEC 61000-4-3 Electrical fast transient/burst immunity test level 4 conforming to IEC 61000-4-4 1.2/50 µs - 8/20 µs surge immunity test level 3 conforming to IEC 61000-4-5 Conducted radio-frequency immunity test level 3 conforming to IEC 61000-4-6
Pollution Degree	2 conforming to IEC 61800-5-1

Vibration Resistance	1.5 mm peak to peak (f= 2…13 Hz) conforming to IEC 60068-2-6 1 gn (f= 13…200 Hz) conforming to IEC 60068-2-6
Shock Resistance	15 gn for 11 ms conforming to IEC 60068-2-27
Relative Humidity	5…95 % without condensation conforming to IEC 60068-2-3
Ambient Air Temperature For Operation	-15…45 °C (without derating) 45…60 °C (with derating factor)
Ambient Air Temperature For Storage	-40…70 °C
Operating Altitude	<= 1000 m without derating 1000...4800 m with current derating 1 % per 100 m
Environmental Characteristic	Chemical pollution resistance class 3C3 conforming to IEC 60721-3-3 Dust pollution resistance class 3S3 conforming to IEC 60721-3-3
Standards	IEC 61800-3 Environment 2 category C3 IEC 61800-3 IEC 61800-5-1 IEC 60721-3
Marking	CE

Packing Units

Unit Type Of Package 1	PCE
Number Of Units In Package 1	1
Package 1 Height	33.000 cm
Package 1 Width	25.000 cm
Package 1 Length	68.000 cm
Package 1 Weight	15.000 kg
Unit Type Of Package 2	P06
Number Of Units In Package 2	4
Package 2 Height	77.000 cm
Package 2 Width	80.000 cm
Package 2 Length	60.000 cm
Package 2 Weight	80.000 kg

Sustainability

Green Premium™ label is Schneider Electric's commitment to delivering products with best-in-class environmental performance. Green Premium promises compliance with the latest regulations, transparency on environmental impacts, as well as circular and low-CO_2 products.

Guide to assessing product sustainability is a white paper that clarifies global eco-label standards and how to interpret environmental declarations.

Learn more about Green Premium >

Guide to assess a product's sustainability >

Transparency RoHS/REACh

Resource performance

Upgradeable Through Digital Modules And Upgraded Components

Well-being performance

Mercury Free

Rohs Exemption Information	Yes

Certifications & Standards

Reach Regulation	REACh Declaration
Eu Rohs Directive	Pro-active compliance (Product out of EU RoHS legal scope)
China Rohs Regulation	China RoHS declaration
Environmental Disclosure	Product Environmental Profile
Weee	The product must be disposed on European Union markets following specific waste collection and never end up in rubbish bins
Circularity Profile	End of Life Information

Dimensions Drawings

Dimensions

IP20 Drives

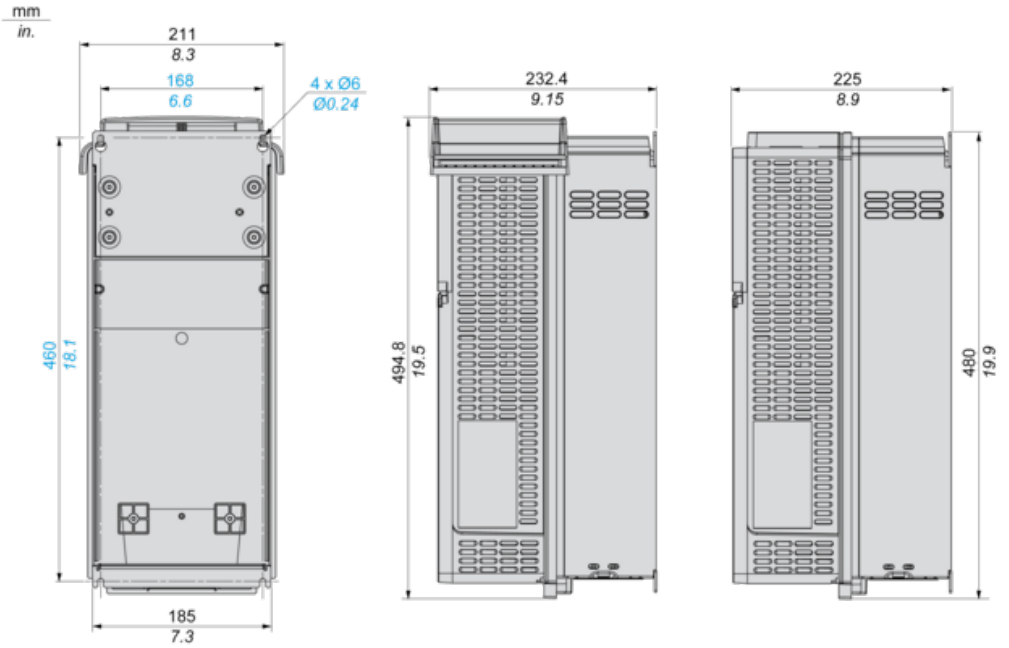

Drawings from left to right: rear view, right side view with top cover, right side view without top cover.

IP20 Drives With EMC Plate

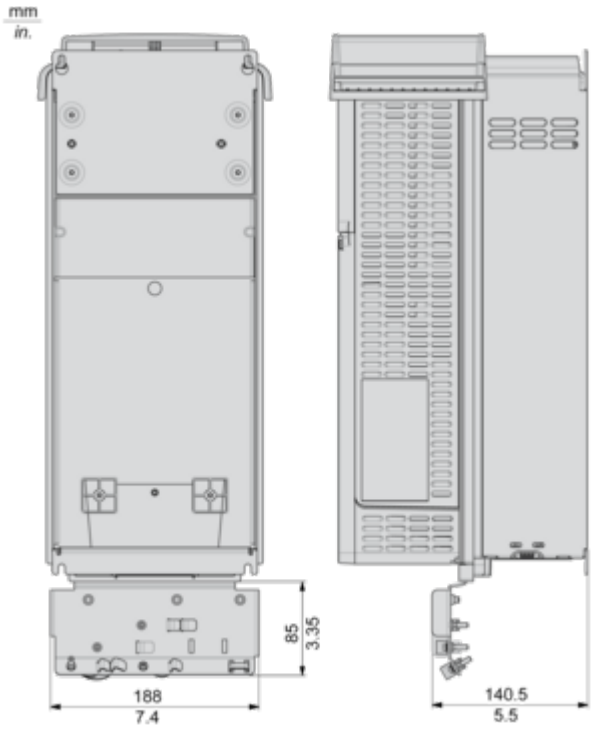

Drawings from left to right: rear view, right side view with top cover.

Mounting and Clearance

Clearances

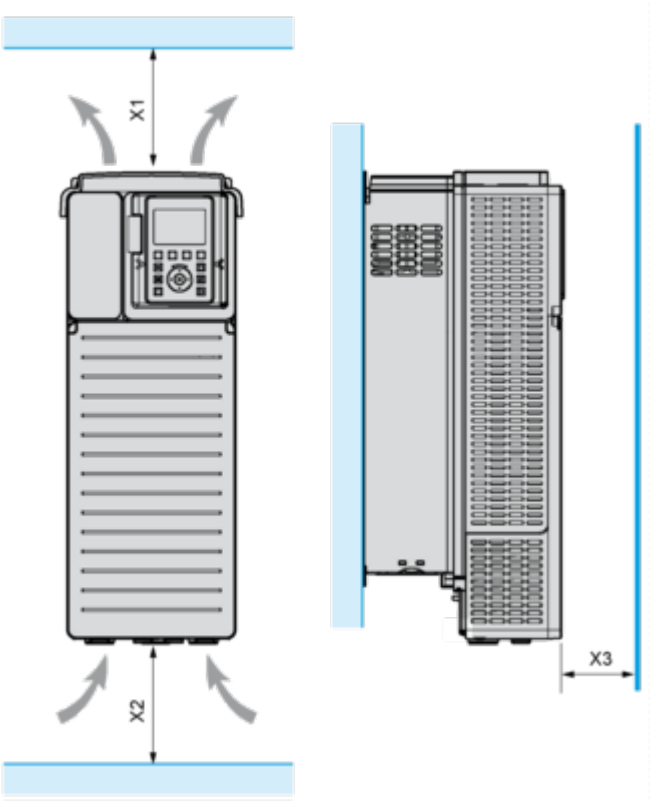

X1	X2	X3
≥ 100 mm (3.94 in.)	≥ 100 mm (3.94 in.)	≥ 10 mm (0.39 in.)

- Mount the device in a vertical position (±10°). This is required for cooling the device.
- Do not mount the device close to heat sources.
- Leave sufficient free space so that the air required for cooling purposes can circulate from the bottom to the top of the drive.

Mounting Types

Mounting Type A: Individual IP21

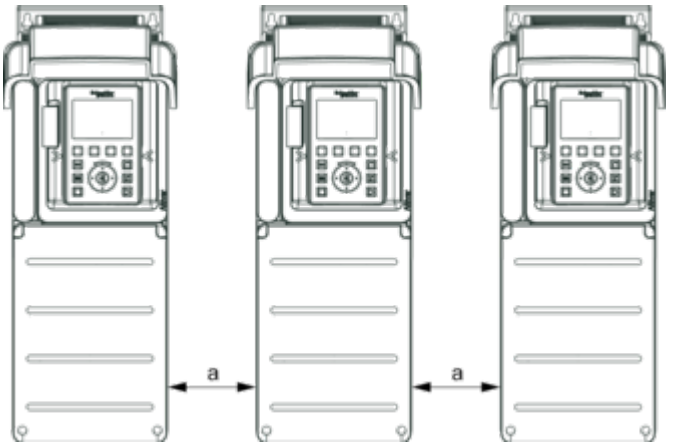

a ≥ = 100 mm (3.94 in.)

Mounting Type B: Side by Side IP20

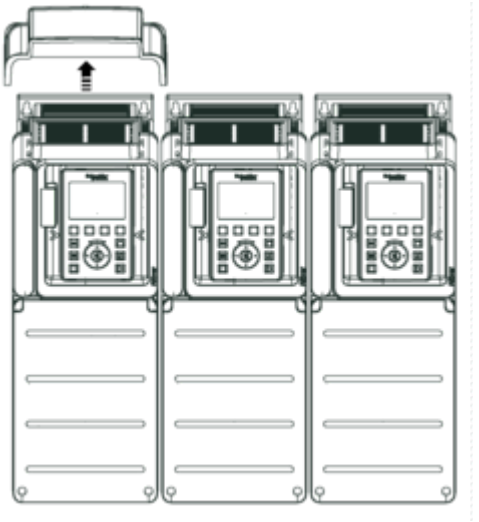

Connections and Schema

Single or Three-phase Power Supply - Diagram With Line Contactor

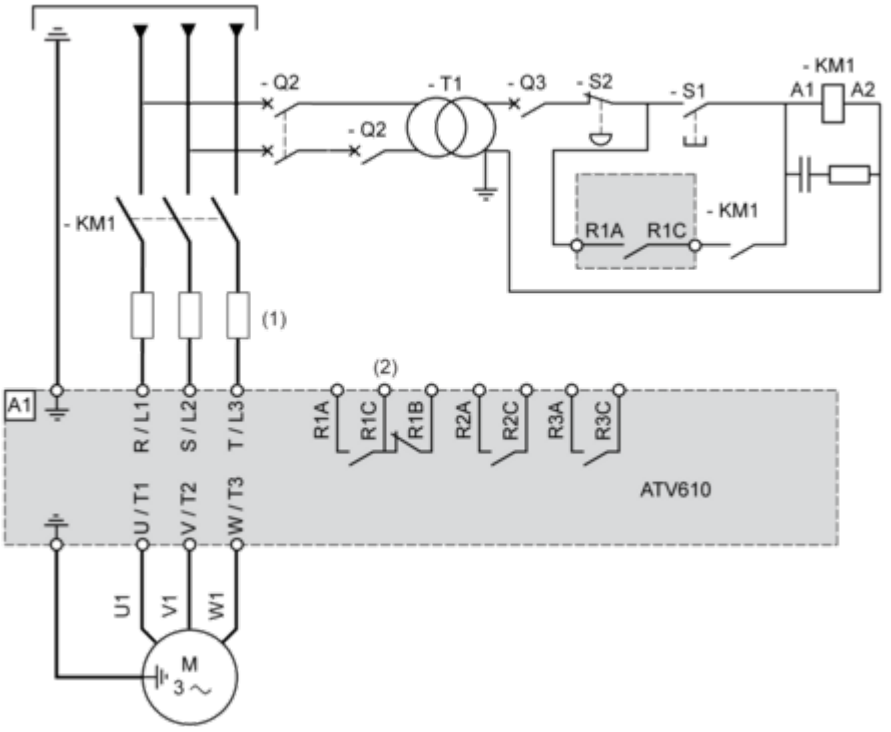

(1) Line chokes
(2) See control block wiring diagram
A1 : Drive
KM1 : Line Contactor
Q2, Q3 : Circuit breakers
S1, S2 : Pushbuttons
T1 : Transformer for control part

Control Block Wiring Diagram

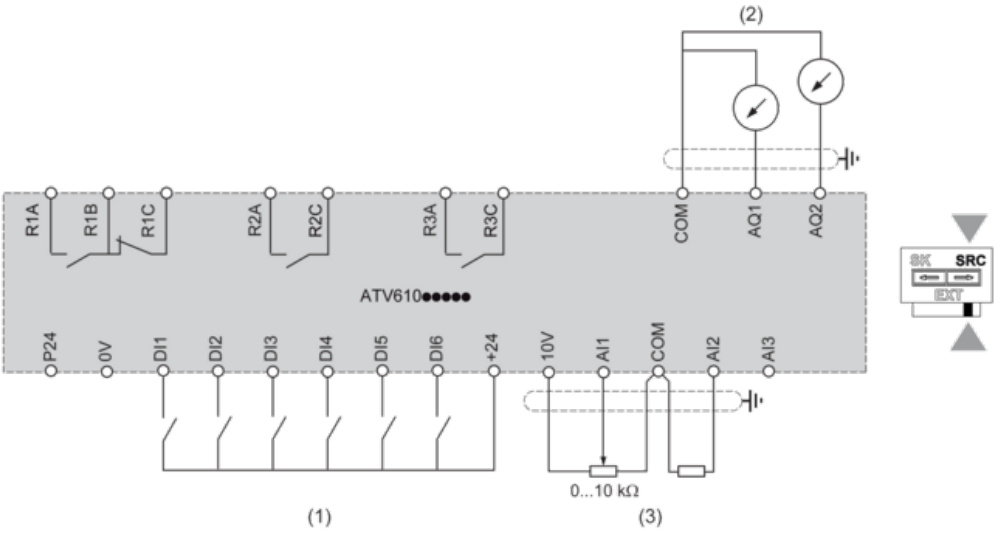

(1) Digital Input
(2) Analog Output
(3) Analog Input
R1A, R1B, R1C : Fault relay output
R2A, R2C : Sequence relay output
R3A, R3C : Sequence relay output

Sensor Connection

It is possible to connect either 1 or 3 sensors on terminals AI2 or AI3.

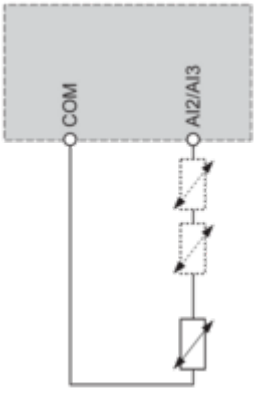

Performance Curves

Derating Curves

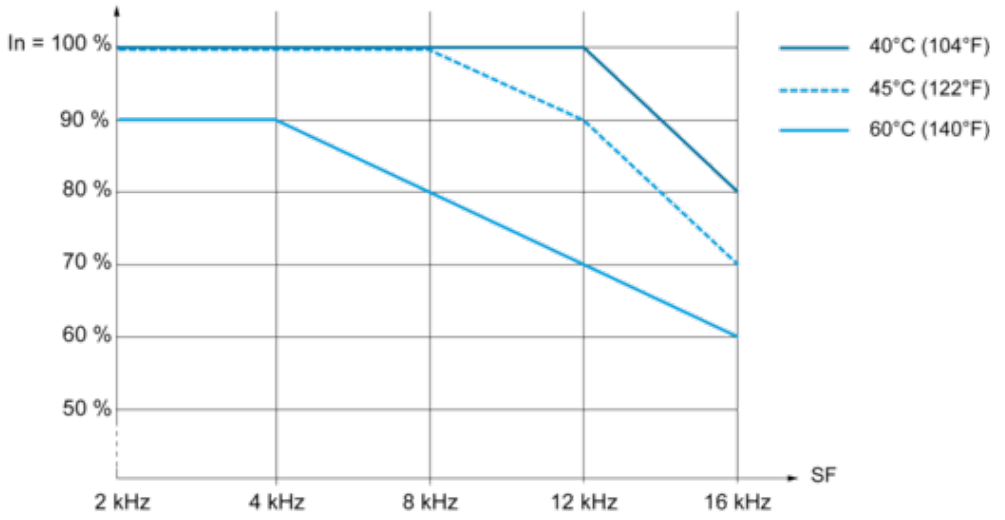

In : Nominal Drive Current
SF : Switching Frequency