Product datasheet

Specifications

Green Premium™

servo motor BMI 3-phase - untapped IP54 single turn - 131072 p/t - brake

BMI0702P01F

Discontinued on: May 6, 2023 AD

Discontinued

Main

Range Compatibility	Lexium 32i
Product Or Component Type	Servo motor with power stage
Device Short Name	BMI

Complementary

Maximum Mechanical Speed	8000 rpm
[Us] Rated Supply Voltage	208...480 V - 15...10 %
Supply Voltage Limits	208…480 V
Network Number Of Phases	Three phase
Supply Frequency	50/60 Hz - 5...5 %
Network Frequency Limits	47.5…63 Hz
Emc Filter	Integrated
Continuous Output Current	2 A at 8 kHz
Output Current 3S Peak	6 A at 400 V for 3 s
Continuous Stall Current	2 A
Continuous Stall Torque	2.48 N.m at 208...480 V three phase
Peak Stall Torque	6.8 N.m at 208 V three phase 6.8 N.m at 400 V three phase 6.8 N.m at 480 V three phase
Nominal Output Power	400 W at 208 V three phase 800 W at 400 V three phase 900 W at 480 V three phase
Nominal Torque	2.4 N.m at 208 V three phase 2.2 N.m at 400 V three phase 2 N.m at 480 V three phase
Nominal Speed	1800 rpm at 208 V three phase 3600 rpm at 400 V three phase 4400 rpm at 480 V three phase
Maximum Current Irms	9.6 A at 208 V, three phase 9.6 A at 400 V, three phase 9.6 A at 480 V, three phase
Product Compatibility	Drive control unit LXM32i CANopen Drive control unit LXM32i EtherCAT
Shaft End	Untapped
Second Shaft	Without second shaft end
Shaft Diameter	11 mm

Disclaimer: This documentation is not intended as a substitute for and is not to be used for determining suitability or reliability of these products for specific user applications

Shaft Length	23 mm
Feedback Type	Absolute single turn SinCos Hiperface
Speed Feedback Resolution	131072 points/turn
Holding Brake	With
Holding Torque	3 N.m holding brake
Mounting Support	International standard flange
Motor Flange Size	70 mm
Electrical Connection	Printed circuit board connector
Torque Constant	1.15 N.m/A at 20 °C
Back Emf Constant	77.18 V/krpm at 20 °C
Number Of Motor Poles	10
Rotor Inertia	1.24 kg.cm²
Stator Resistance	8.89 Ohm at 20 °C
Stator Inductance	25.75 mH at 20 °C
Stator Electrical Time Constant	2.9 ms at 20 °C
Maximum Radial Force Fr	710 N at 1000 rpm 560 N at 2000 rpm 490 N at 3000 rpm 450 N at 4000 rpm 410 N at 5000 rpm 390 N at 6000 rpm
Maximum Axial Force Fa	0.2 x Fr
Brake Pull-In Power	5 W
Type Of Cooling	Natural convection
Length	306 mm
Number Of Motor Stacks	2
Centring Collar Diameter	60 mm
Centring Collar Depth	2.5 mm
Number Of Mounting Holes	4
Mounting Holes Diameter	5.5 mm
Circle Diameter Of The Mounting Holes	75…82 mm
Distance Shaft Shoulder-Flange	2.5 mm

Environment

Ip Degree Of Protection	Shaft: IP54 Housing: IP65

Packing Units

Unit Type Of Package 1	PCE
Number Of Units In Package 1	1
Package 1 Height	26.0 cm
Package 1 Width	20.0 cm
Package 1 Length	59.0 cm
Package 1 Weight	5.4 kg

Contractual warranty

Warranty	18 months

Sustainability

Green Premium™ label is Schneider Electric's commitment to delivering products with best-in-class environmental performance. Green Premium promises compliance with the latest regulations, transparency on environmental impacts, as well as circular and low-CO_2 products.

Guide to assessing product sustainability is a white paper that clarifies global eco-label standards and how to interpret environmental declarations.

Learn more about Green Premium >

Guide to assess a product's sustainability >

Transparency RoHS/REACh

Well-being performance

Mercury Free	
Rohs Exemption Information	Yes
Pvc Free	

Certifications & Standards

Reach Regulation	REACh Declaration
Eu Rohs Directive	Pro-active compliance (Product out of EU RoHS legal scope)
China Rohs Regulation	China RoHS declaration
Environmental Disclosure	Product Environmental Profile
Weee	The product must be disposed on European Union markets following specific waste collection and never end up in rubbish bins
Circularity Profile	End of Life Information

Dimensions Drawings

External Dimensions

With Standard Braking Resistor

Mounting type A

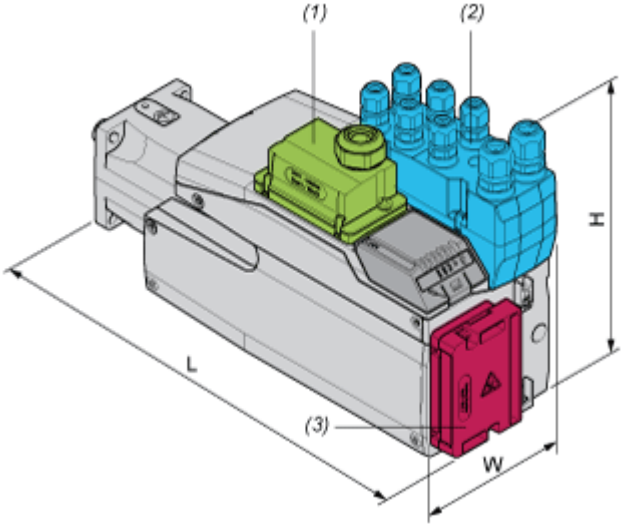

(1) Module for supply voltage

(2) I/O module

(3) Standard braking resistor

Dimensions in mm

W	H	L
99	187	327

Dimensions in in.

W	H	L
3,90	7,36	12,87

Mounting type B

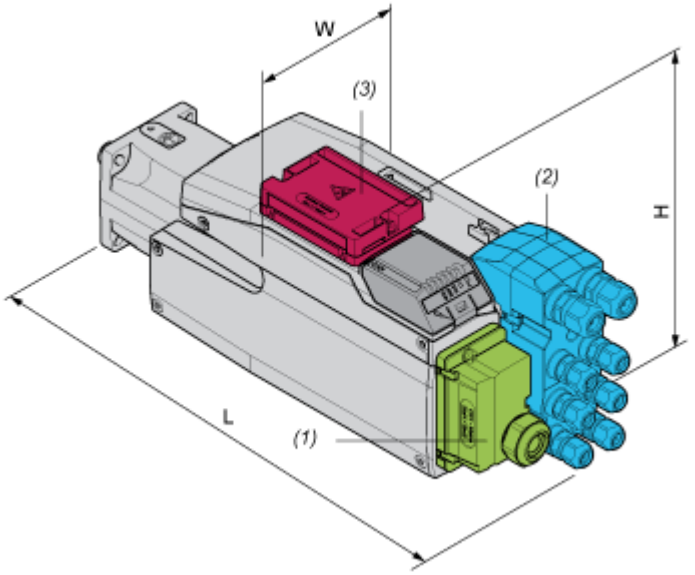

(1) Module for supply voltage

(2) I/O module

(3) Standard braking resistor

Dimensions in mm

W	H	L
99	138,5	376

Dimensions in in.

W	H	L
3,90	5,45	14,8

With External Braking Resistor

Mounting type C

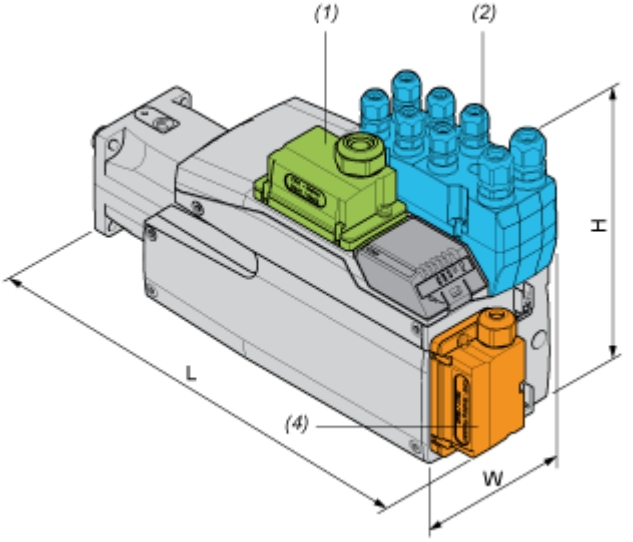

(1) Module for supply voltage

(2) I/O module

(4) External braking resistor

Dimensions in mm

W	H	L
99	187	339

Dimensions in in.

W	H	L
3,90	7,36	13,35

Mounting type D

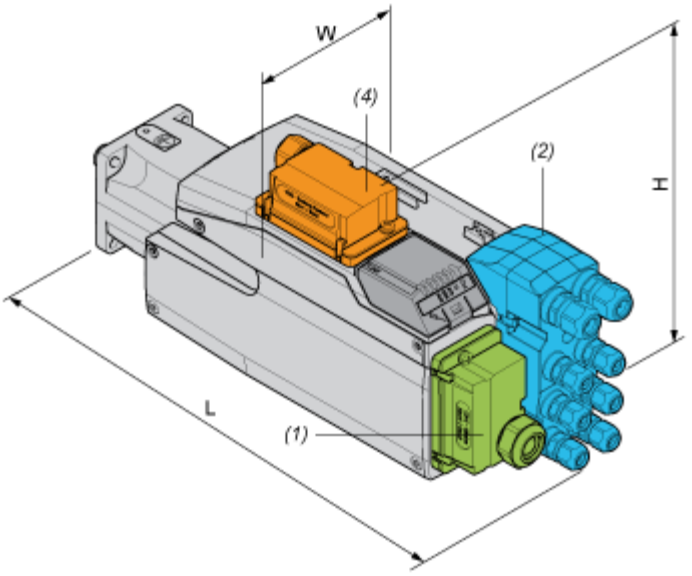

(1) Module for supply voltage

(2) I/O module

(4) External braking resistor

Dimensions in mm

W	H	L
99	160	376

Dimensions in in.

W	H	L
3,90	6,3	14,8

Mounting type E

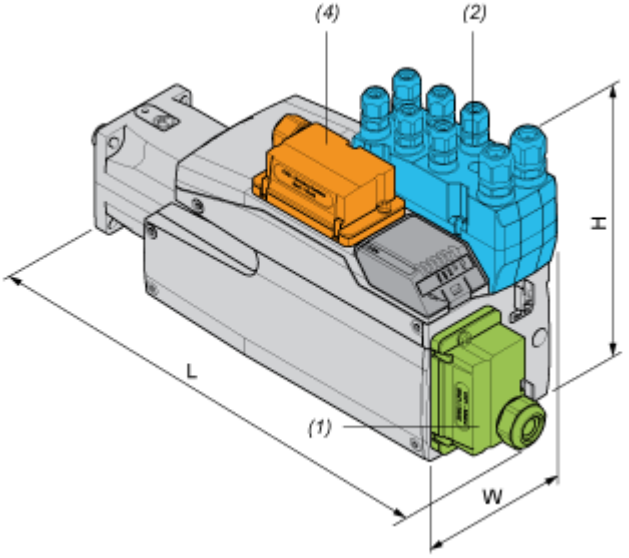

(1) Module for supply voltage

(2) I/O module

(4) External braking resistor

Dimensions in mm

W	H	L
99	187	366

Dimensions in in.

W	H	L
3,90	7,36	14,41

Mounting type F

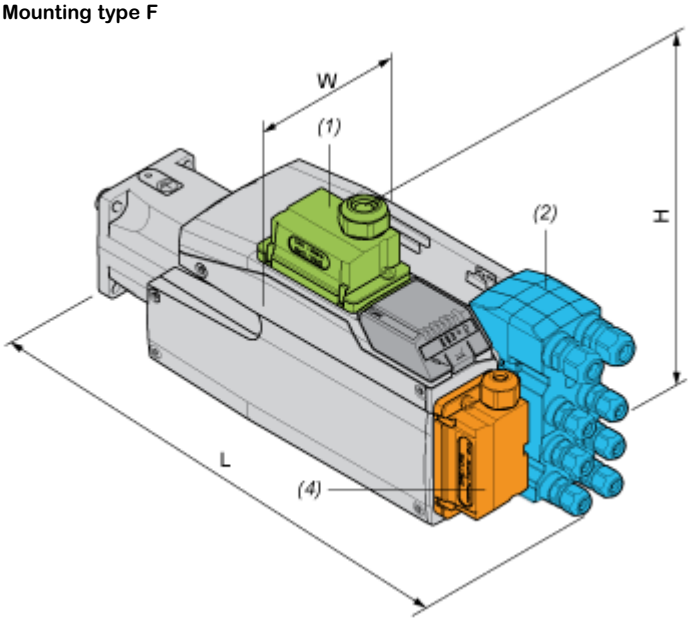

(1) Module for supply voltage

(2) I/O module

(4) External braking resistor

Dimensions in mm

W	H	L
99	180	376

Dimensions in in.

W	H	L
3,90	7,09	14,8

Performance Curves

Performance Curves

Torque/Speed Curves with 208 V Three Phases Supply Voltage

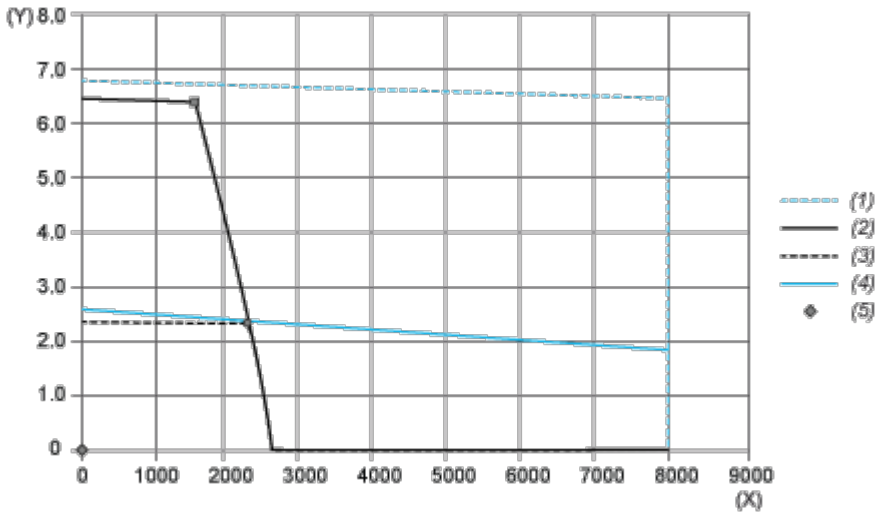

(X) Speed (rpm)

(Y) Torque (N.m)

(1) Motor peak

(2) Drive peak

(3) Drive cont

(4) Motor cont

(5) Operating point

		Power	At Speed	With Torque
max. Peak Power	■	1013 W	1520 rpm	6.36 N.m
max Cont. Power (Drive)	●	519 W	2240 rpm	2.21 N.m

Performance Curves

Torque/Speed Curves with 400 V Three Phases Supply Voltage

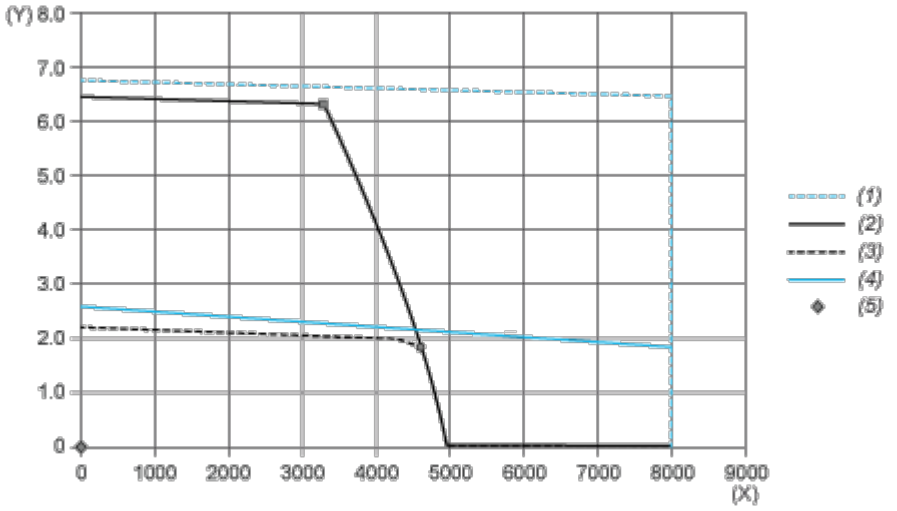

(X) Speed (rpm)

(Y) Torque (N.m)

(1) Motor peak

(2) Drive peak

(3) Drive cont

(4) Motor cont

(5) Operating point

		Power	At Speed	With Torque
max. Peak Power	■	2161 W	3280 rpm	6.29 N.m
max Cont. Power (Drive)	●	892 W	4560 rpm	1.87 N.m

Performance Curves

Torque/Speed Curves with 480 V Three Phases Supply Voltage

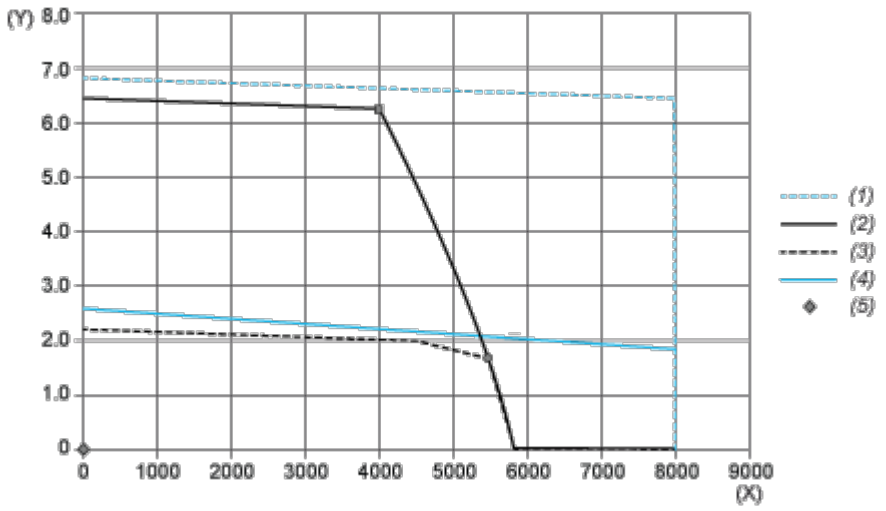

(X) Speed (rpm)

(Y) Torque (N.m)

(1) Motor peak

(2) Drive peak

(3) Drive cont

(4) Motor cont

(5) Operating point

		Power	At Speed	With Torque
max. Peak Power	■	2623 W	4000 rpm	6.26 N.m
max Cont. Power (Drive)	●	943 W	5600 rpm	1.61 N.m