Product datasheet

Specifications

Green Premium™

servo motor BMI 1-phase - untapped IP65 single turn - 131072 p/t - brake

BMI0703T21F

Main

Range Compatibility	Lexium 32i
Product Or Component Type	Servo motor with power stage
Device Short Name	BMI

Complementary

Maximum Mechanical Speed	8000 rpm
[Us] Rated Supply Voltage	115...230 V - 15...10 %
Supply Voltage Limits	100…240 V
Network Number Of Phases	Single phase
Supply Frequency	50/60 Hz - 5...5 %
Network Frequency Limits	47.5…63 Hz
Emc Filter	Integrated
Continuous Output Current	3.5 A at 8 kHz
Output Current 3S Peak	10.5 A at 230 V for 3 s
Continuous Stall Current	3.5 A
Continuous Stall Torque	3.4 N.m at 115...230 V single phase
Peak Stall Torque	8.6 N.m at 115 V single phase 8.6 N.m at 230 V single phase
Nominal Output Power	700 W at 230 V single phase 400 W at 115 V single phase
Nominal Torque	2.9 N.m at 115 V single phase 2.2 N.m at 230 V single phase
Nominal Speed	3200 rpm at 230 V single phase 1400 rpm at 115 V single phase
Maximum Current Irms	17.8 A at 115 V, single phase 17.8 A at 230 V, single phase
Product Compatibility	Drive control unit LXM32i CANopen Drive control unit LXM32i EtherCAT
Shaft End	Untapped
Second Shaft	Without second shaft end
Shaft Diameter	14 mm
Shaft Length	30 mm
Feedback Type	Absolute single turn SinCos Hiperface
Speed Feedback Resolution	131072 points/turn

Disclaimer: This documentation is not intended as a substitute for and is not to be used for determining suitability or reliability of these products for specific user applications

Holding Brake	With
Holding Torque	3 N.m holding brake
Mounting Support	International standard flange
Motor Flange Size	70 mm
Electrical Connection	Printed circuit board connector
Torque Constant	0.81 N.m/A at 20 °C
Back Emf Constant	54.44 V/krpm at 20 °C
Number Of Motor Poles	10
Rotor Inertia	1.78 kg.cm²
Stator Resistance	2.58 Ohm at 20 °C
Stator Inductance	2.28 mH at 20 °C
Stator Electrical Time Constant	0.88 ms at 20 °C
Maximum Radial Force Fr	730 N at 1000 rpm 580 N at 2000 rpm 510 N at 3000 rpm 460 N at 4000 rpm 430 N at 5000 rpm 400 N at 6000 rpm
Maximum Axial Force Fa	0.2 x Fr
Brake Pull-In Power	5 W
Type Of Cooling	Natural convection
Length	339 mm
Number Of Motor Stacks	3
Centring Collar Diameter	60 mm
Centring Collar Depth	2.5 mm
Number Of Mounting Holes	4
Mounting Holes Diameter	5.5 mm
Circle Diameter Of The Mounting Holes	75…82 mm
Distance Shaft Shoulder-Flange	2.5 mm

Environment

Ip Degree Of Protection	IP65

Packing Units

Unit Type Of Package 1	PCE
Number Of Units In Package 1	1
Package 1 Height	25.0 cm
Package 1 Width	18.6 cm
Package 1 Length	55.0 cm
Package 1 Weight	6.5 kg

Contractual warranty

Warranty	18 months

Sustainability

Green Premium™ label is Schneider Electric's commitment to delivering products with best-in-class environmental performance. Green Premium promises compliance with the latest regulations, transparency on environmental impacts, as well as circular and low-CO_2 products.

Guide to assessing product sustainability is a white paper that clarifies global eco-label standards and how to interpret environmental declarations.

Learn more about Green Premium >

Guide to assess a product's sustainability >

Transparency RoHS/REACh

Well-being performance

Mercury Free	
Rohs Exemption Information	Yes
Pvc Free	

Certifications & Standards

Reach Regulation	REACh Declaration
Eu Rohs Directive	Pro-active compliance (Product out of EU RoHS legal scope)
China Rohs Regulation	China RoHS declaration
Environmental Disclosure	Product Environmental Profile
Weee	The product must be disposed on European Union markets following specific waste collection and never end up in rubbish bins
Circularity Profile	End of Life Information

Dimensions Drawings

External Dimensions

With Standard Braking Resistor

Mounting type A

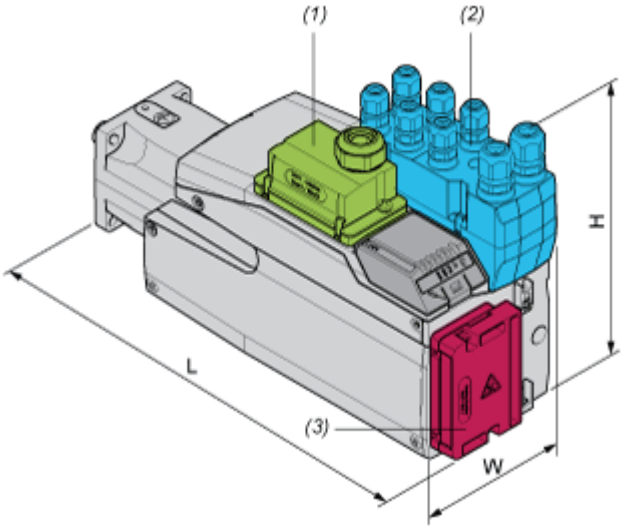

(1) Module for supply voltage

(2) I/O module

(3) Standard braking resistor

Dimensions in mm

W	H	L
99	187	360

Dimensions in in.

W	H	L
3,90	7,36	14,17

Mounting type B

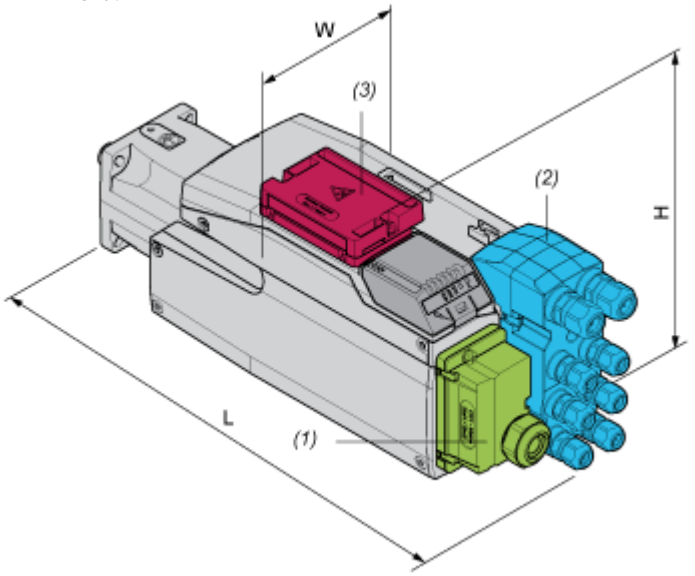

(1) Module for supply voltage

(2) I/O module

(3) Standard braking resistor

Dimensions in mm

W	H	L
99	138,5	409

Dimensions in in.

W	H	L
3,90	5,45	16,1

With External Braking Resistor

Mounting type C

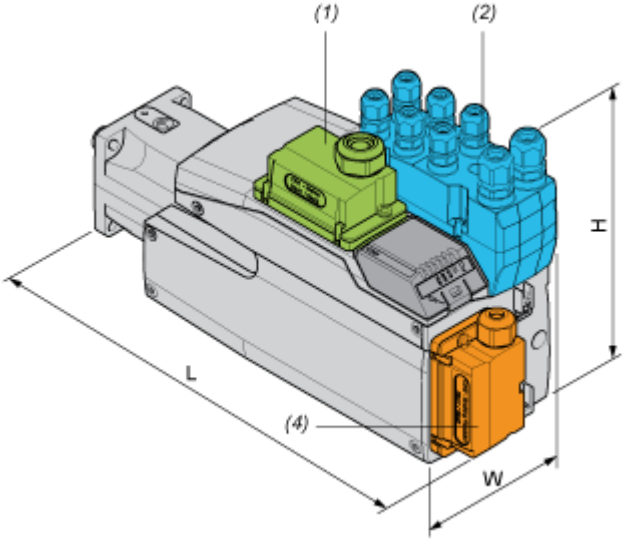

(1) Module for supply voltage

(2) I/O module

(4) External braking resistor

Dimensions in mm

W	H	L
99	187	372

Dimensions in in.

W	H	L
3,90	7,36	14,65

Mounting type D

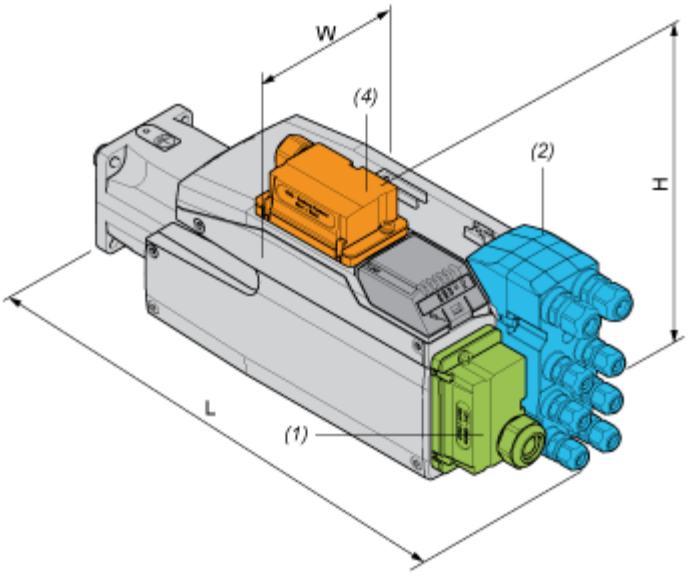

(1) Module for supply voltage

(2) I/O module

(4) External braking resistor

Dimensions in mm

W	H	L
99	160	409

Dimensions in in.

W	H	L
3,90	6,3	16,1

Mounting type E

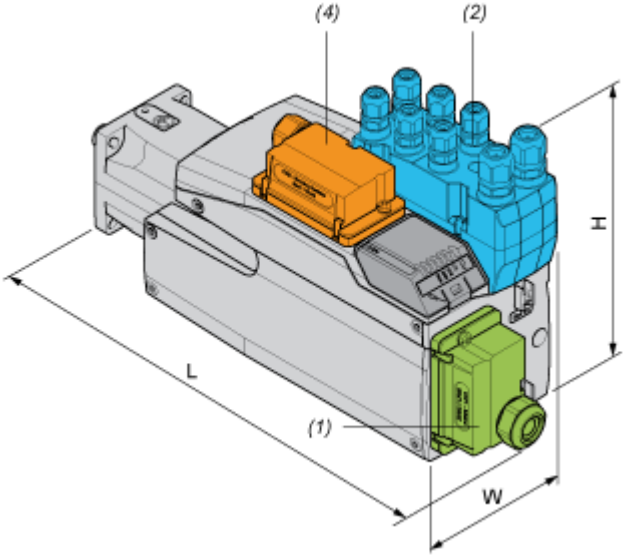

(1) Module for supply voltage

(2) I/O module

(4) External braking resistor

Dimensions in mm

W	H	L
99	187	399

Dimensions in in.

W	H	L
3,90	7,36	15,71

Mounting type F

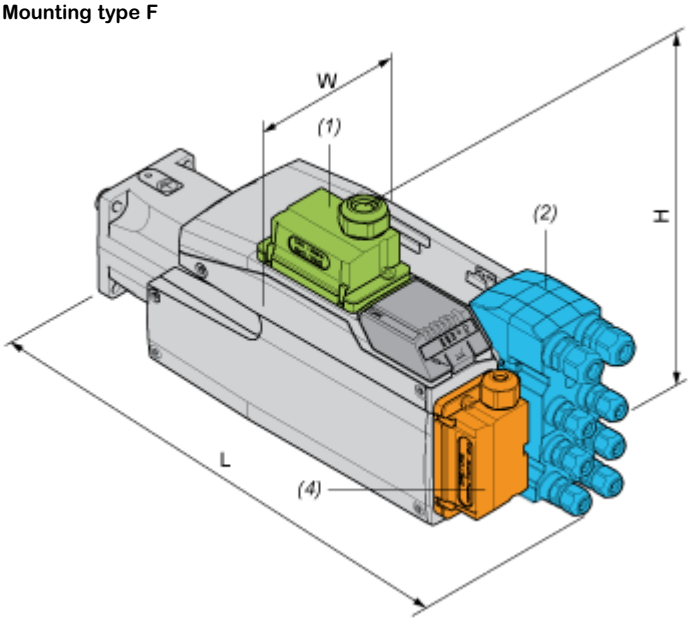

(1) Module for supply voltage

(2) I/O module

(4) External braking resistor

Dimensions in mm

W	H	L
99	180	409

Dimensions in in.

W	H	L
3,90	7,09	16,1

Performance Curves

Performance Curves

Torque/Speed Curves with 115 V Single Phase Supply Voltage

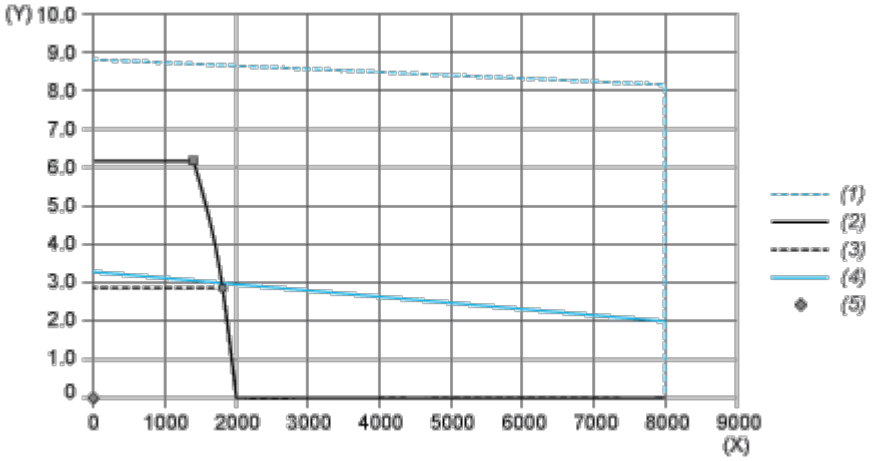

(X) Speed (rpm)

(Y) Torque (N.m)

(1) Motor peak

(2) Drive peak

(3) Drive cont

(4) Motor cont

(5) Operating point

		Power	At Speed	With Torque
max. Peak Power	■	889 W	1360 rpm	6.24 N.m
max Cont. Power (Drive)	●	501 W	1680 rpm	2.85 N.m

Performance Curves

Torque/Speed Curves with 230 V Single Phase Supply Voltage

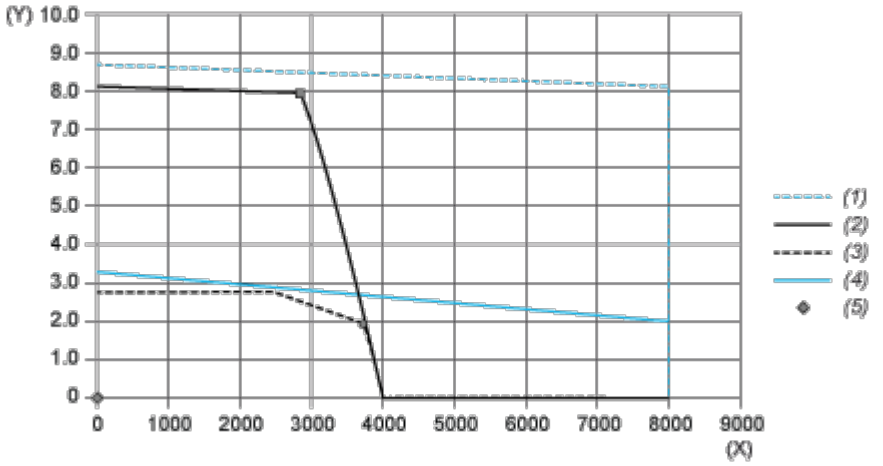

(X) Speed (rpm)

(Y) Torque (N.m)

(1) Motor peak

(2) Drive peak

(3) Drive cont

(4) Motor cont

(5) Operating point

		Power	At Speed	With Torque
max. Peak Power	■	2314 W	2800 rpm	7.89 N.m
max Cont. Power (Drive)	●	738 W	3600 rpm	1.96 N.m