Product datasheet

Specifications

Green Premium™

Discontinued

circuit breaker EasyPact Vigi CVS100F, 36 kA at 415 VAC, 80 A rating TM-D trip unit, MH Vigi module, 4P 3d

LV510406

Discontinued on: Dec 15, 2020 AD

Main

Range	EasyPact
Product Name	EasyPact CVS
Device Short Name	Vigi CVS100F
Product Or Component Type	Earth leakage circuit breaker
Device Application	Distribution
Poles Description	4P
Protected Poles Description	3D
Earth Leakage Protection (Vigi Add On)	With
[In] Rated Current	80 A at 40 °C
Network Type	AC
Utilisation Category	Category A
[Icu] Breaking Capacity	36 kA Icu at 440 V AC 50/60 Hz conforming to IEC 60947-2 36 kA Icu at 380/415 V AC 50/60 Hz conforming to IEC 60947-2 70 kA Icu at 220/240 V AC 50/60 Hz conforming to IEC 60947-2
Trip Unit Name	TM-D
Trip Unit Technology	Thermal-magnetic
Trip Unit Rating	80 A at 40 °C
Protection Type	Short-circuit protection (magnetic) Overload protection (thermal) Earth-leakage protection

Complementary

[Uimp] Rated Impulse Withstand Voltage	8 kV conforming to EN/IEC 60947-2
Network Frequency	50/60 Hz
Breaking Capacity Code	F
[Ics] Rated Service Breaking Capacity	18 kA at 440 V AC 50/60 Hz conforming to IEC 60947-2 36 kA at 380/415 V AC 50/60 Hz conforming to IEC 60947-2 70 kA at 220/240 V AC 50/60 Hz conforming to IEC 60947-2
Neutral Position	Left
Mechanical Durability	30000 cycles
Electrical Durability	12000 cycles 415 V In conforming to IEC 60947-2
Control Type	Toggle

Disclaimer: This documentation is not intended as a substitute for and is not to be used for determining suitability or reliability of these products for specific user applications

Thermal Protection Adjustment Range	56…80 A
Neutral Protection Setting	No protection (3D)
Long Time Pick-Up Adjustment Type Ir	Adjustable
Long Time Pick-Up Adjustment Range	0.7...1 x In
Long Time Delay Adjustment Type	Fixed
Instantaneous Pick-Up Adjustment Type Ii	Fixed
Instantaneous Pick-Up Adjustment Range	640 A
Earth-Leakage Add-On Module Name	MH
Earth-Leakage Protection Class	Class A
Residual Earth-Leakage Sensitity Adjustment Type	Adjustable 5 settings
[Iδn] Residual Earth-Leakage Sensitive Adjustment	0.3 A 1 A 3 A 10 A 30 A
Residual Earth-Leakage Time Delay Adjustment Type	Adjustable 5 settings
[Δt] Residual Earth-Leakage Time Delay Adjustment	0 ms 40 ms 60 ms 140 ms 150 ms 300 ms 310 ms 800 ms
Contact Position Indicator	Yes
Mounting Mode	Fixed
Mounting Support	Backplate
Upside Connection	Front
Downside Connection	Front
Connections - Terminals	Screw connection
Connection Pitch	35 mm
Compatibility Code	CVS100
Width	140 mm
Depth	86 mm
Height	236 mm
Net Weight	2.2 kg

Environment

Standards	IEC 60947-2 EN 60947-2
Product Certifications	GOST IEC
Electrical Shock Protection Class	Class II
Pollution Degree	3 conforming to IEC 60664-1
Ip Degree Of Protection	IP40
Ambient Air Temperature For Operation	-25…70 °C
Ambient Air Temperature For Storage	-50…85 °C

Contractual warranty

Warranty	18 months

Sustainability

Green Premium™ label is Schneider Electric's commitment to delivering products with best-in-class environmental performance. Green Premium promises compliance with the latest regulations, transparency on environmental impacts, as well as circular and low-CO_2 products.

Guide to assessing product sustainability is a white paper that clarifies global eco-label standards and how to interpret environmental declarations.

Learn more about Green Premium >

Guide to assess a product's sustainability >

Transparency RoHS/REACh

Well-being performance

Mercury Free

Rohs Exemption Information Yes

Certifications & Standards

Eu Rohs Directive	Compliant EU RoHS Declaration
China Rohs Regulation	China RoHS declaration Product out of China RoHS scope. Substance declaration for your information
Environmental Disclosure	Product Environmental Profile
Circularity Profile	End of Life Information

Dimensions Drawings

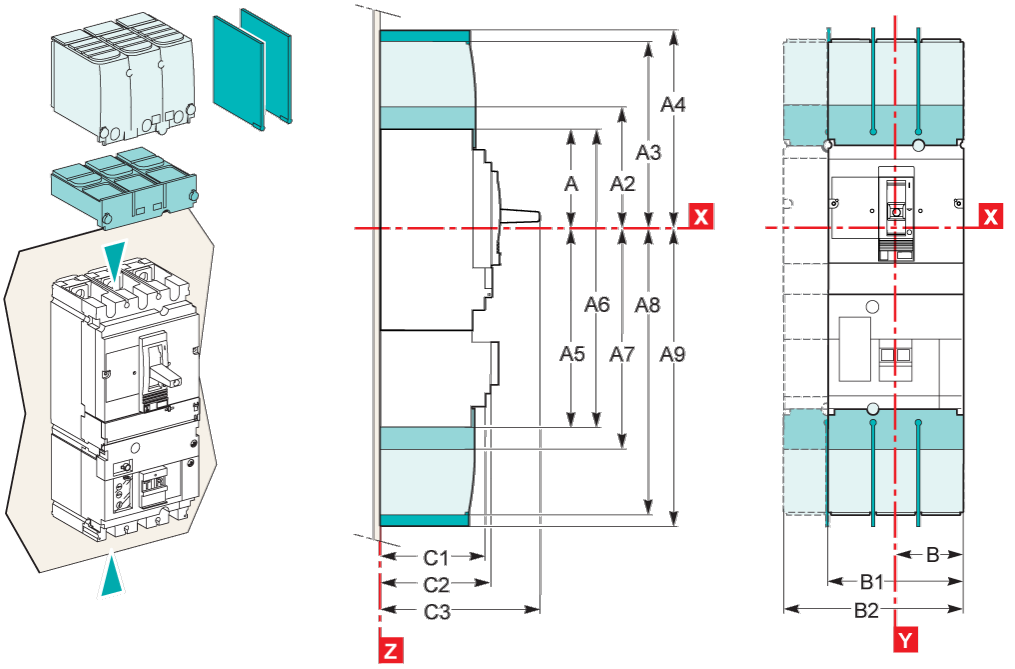

Type	A	A1	A2	A3	A4	A5	A6	A7	A8	A9	B	B1	B2	C1	C2	C3	E1
CVS100/160/250	80.5	161	64	145	170.5	155.5	236	169	220	253.5	52.5	105	140	81	86	111[2]	62.5
CVS400/630	127.5	255	142.5	200	237	227.5	355	242.5	300	337	70	140	185	95.5	110	168	100
Type	**E2**	**E3**	**E4**	**E5**	**E6**	**E7**	**E8**	**F1**	**F2**	**F3**	**G1**	**G2**	**G3**	**G4**	**G5**	**ØT**	**U**
CVS100/160/250	125	70	140	157.5	200	145	215	35	17.5	70	55	75	13.5	33	17.5	24	y 32
CVS400/630	200	113.5	227	200	300	213.5	327	45	22.5	90	-	-	-	-	-	32	y 35

[2] C3=126mm for EasyPact CVS2500/F.

Assembly

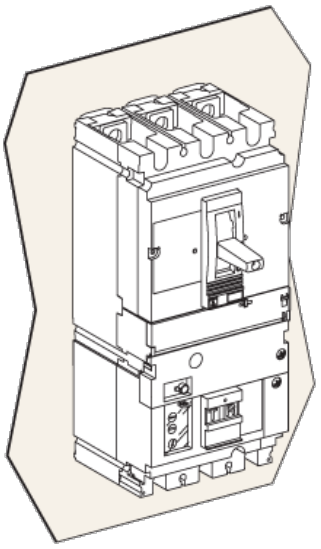

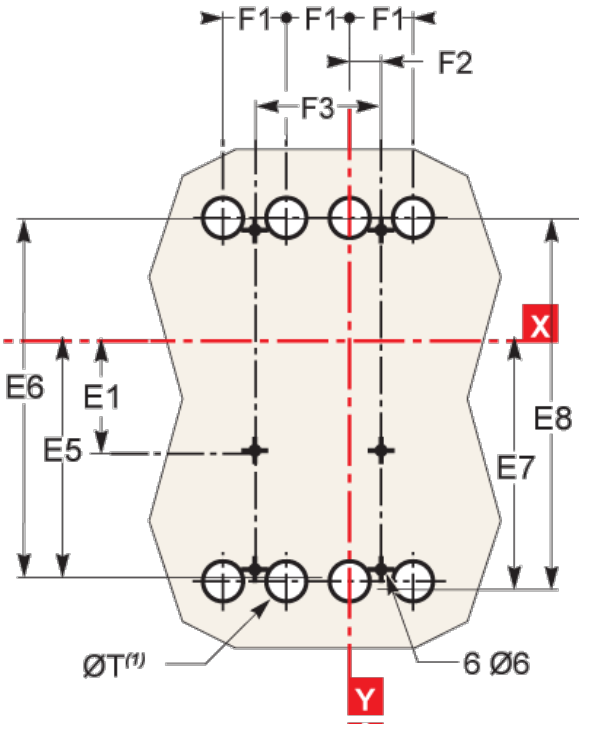

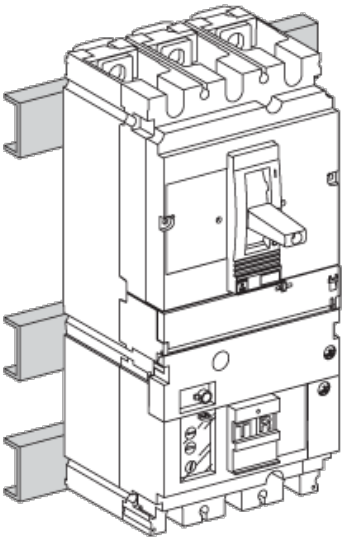

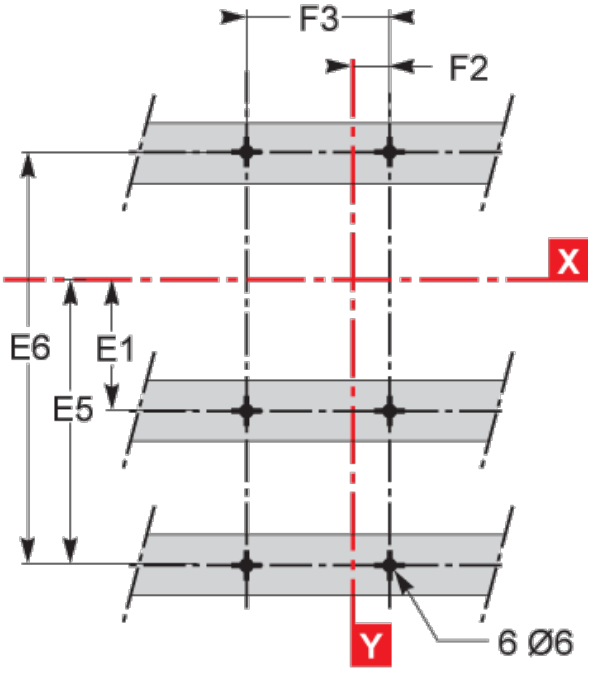

Type	A	A1	A2	A3	A4	A5	A6	A7	A8	A9	B	B1	B2	C1	C2	C3	E1
CVS100/160/250	80.5	161	84	145	179.5	155.5	236	169	220	253.5	52.5	105	140	81	86	111(2)	62.5
CVS400/630	127.5	255	142.5	200	237	227.5	355	242.5	300	337	70	140	185	95.5	110	168	100
Type	**E2**	**E3**	**E4**	**E5**	**E6**	**E7**	**E8**	**F1**	**F2**	**F3**	**G1**	**G2**	**G3**	**G4**	**G5**	**ØT**	**U**
CVS100/160/250	125	70	140	137.5	200	145	215	35	17.5	70	55	75	13.5	33	17.5	24	y 32
CVS400/630	200	113.5	227	200	300	213.5	327	45	22.5	90	-	-	-	-	-	32	y 35

(2) C3=126mm for EasyPact CVS2500/F.
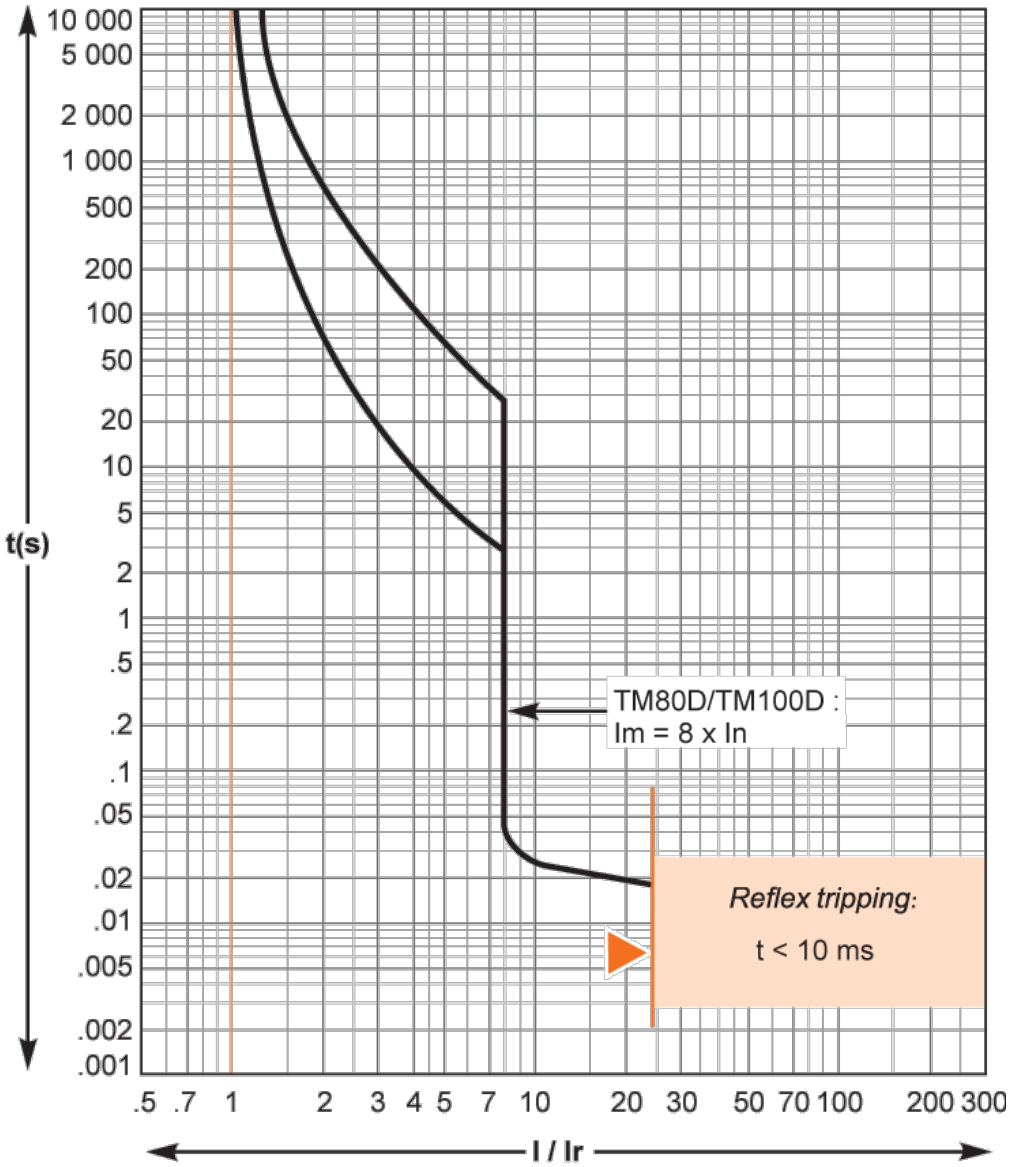
Performance Curves