# Product datasheet

Specifications

Green Premium™

## circuit breaker, EasyPact CVS400N, 50kA at 415VAC, 400A, TM-D trip unit, 3P3d

LV540316

## Main

| | |
|---|---|
| **Range** | EasyPact |
| **Product Name** | EasyPact CVS |
| **Device Short Name** | CVS400N |
| **Product Or Component Type** | Circuit breaker |
| **Device Application** | Distribution |
| **Poles Description** | 3P |
| **Protected Poles Description** | 3D |
| **Earth Leakage Protection (Vigi Add On)** | Without |
| **[In] Rated Current** | 400 A at 40 °C |
| **Network Type** | AC |
| **Utilisation Category** | Category A |
| **[Icu] Breaking Capacity** | 70 kA Icu at 220/240 V AC 50/60 Hz conforming to IEC 60947-2<br>50 kA Icu at 380/415 V AC 50/60 Hz conforming to IEC 60947-2<br>42 kA Icu at 440 V AC 50/60 Hz conforming to IEC 60947-2 |
| **Trip Unit Name** | TM-D |
| **Trip Unit Technology** | Thermal-magnetic |
| **Trip Unit Rating** | 400 A at 40 °C |
| **Protection Type** | Short-circuit protection (magnetic)<br>Overload protection (thermal) |

## Complementary

| | |
|---|---|
| **[Uimp] Rated Impulse Withstand Voltage** | 8 kV conforming to EN/IEC 60947-2 |
| **Network Frequency** | 50/60 Hz |
| **Breaking Capacity Code** | N |
| **[Ics] Rated Service Breaking Capacity** | 70 kA at 220/240 V AC 50/60 Hz conforming to IEC 60947-2<br>50 kA at 380/415 V AC 50/60 Hz conforming to IEC 60947-2<br>32 kA at 440 V AC 50/60 Hz conforming to IEC 60947-2 |
| **Mechanical Durability** | 15000 cycles |
| **Electrical Durability** | 6000 cycles 415 V In conforming to IEC 60947-2 |
| **Control Type** | Toggle |
| **Thermal Protection Adjustment Range** | 280…400 A |
| **Long Time Pick-Up Adjustment Type Ir** | Adjustable |
| **Long Time Pick-Up Adjustment Range** | 0.7...1 x In |

Disclaimer: This documentation is not intended as a substitute for and is not to be used for determining suitability or reliability of these products for specific user applications

| | |
|---|---|
| **Long Time Delay Adjustment Type** | Fixed |
| **Instantaneous Pick-Up Adjustment Type Ii** | Adjustable |
| **Instantaneous Pick-Up Adjustment Range** | 5...10 x In |
| **Contact Position Indicator** | Yes |
| **Mounting Mode** | Fixed |
| **Mounting Support** | Backplate |
| **Upside Connection** | Front |
| **Downside Connection** | Front |
| **Connections - Terminals** | Screw connection |
| **Connection Pitch** | 45 mm |
| **Compatibility Code** | CVS400 |
| **Width** | 140 mm |
| **Depth** | 110 mm |
| **Height** | 255 mm |
| **Net Weight** | 4.7 kg |

## Environment

| | |
|---|---|
| **Standards** | EN 60947-2<br>IEC 60947-2 |
| **Product Certifications** | GOST<br>IEC |
| **Electrical Shock Protection Class** | Class II |
| **Pollution Degree** | 3 conforming to IEC 60664-1 |
| **Ip Degree Of Protection** | IP40 |
| **Ambient Air Temperature For Operation** | -25…70 °C |
| **Ambient Air Temperature For Storage** | -50…85 °C |

## Packing Units

| | |
|---|---|
| **Unit Type Of Package 1** | PCE |
| **Number Of Units In Package 1** | 1 |
| **Package 1 Height** | 14.800 cm |
| **Package 1 Width** | 15.600 cm |
| **Package 1 Length** | 28.700 cm |
| **Package 1 Weight** | 4.916 kg |
| **Unit Type Of Package 2** | S04 |
| **Number Of Units In Package 2** | 3 |
| **Package 2 Height** | 30.000 cm |
| **Package 2 Width** | 40.000 cm |
| **Package 2 Length** | 60.000 cm |
| **Package 2 Weight** | 15.508 kg |

## Contractual warranty

| | |
|---|---|
| **Warranty** | 18 months |

## Sustainability

**Green Premium™ label** is Schneider Electric's commitment to delivering products with best-in-class environmental performance. Green Premium promises compliance with the latest regulations, transparency on environmental impacts, as well as circular and low-$CO_2$ products.

**Guide to assessing product sustainability** is a white paper that clarifies global eco-label standards and how to interpret environmental declarations.

Learn more about Green Premium >

Guide to assess a product's sustainability >

Transparency RoHS/REACh

## Well-being performance

| | |
|---|---|
| Mercury Free | |
| Rohs Exemption Information | Yes |
| Pvc Free | |

## Certifications & Standards

| | |
|---|---|
| **Reach Regulation** | REACh Declaration |
| **Eu Rohs Directive** | Compliant with Exemptions |
| **China Rohs Regulation** | China RoHS declaration<br>Product out of China RoHS scope. Substance declaration for your information |
| **Environmental Disclosure** | Product Environmental Profile |
| **Weee** | The product must be disposed on European Union markets following specific waste collection and never end up in rubbish bins |
| **Circularity Profile** | End of Life Information |

## Dimensions Drawings

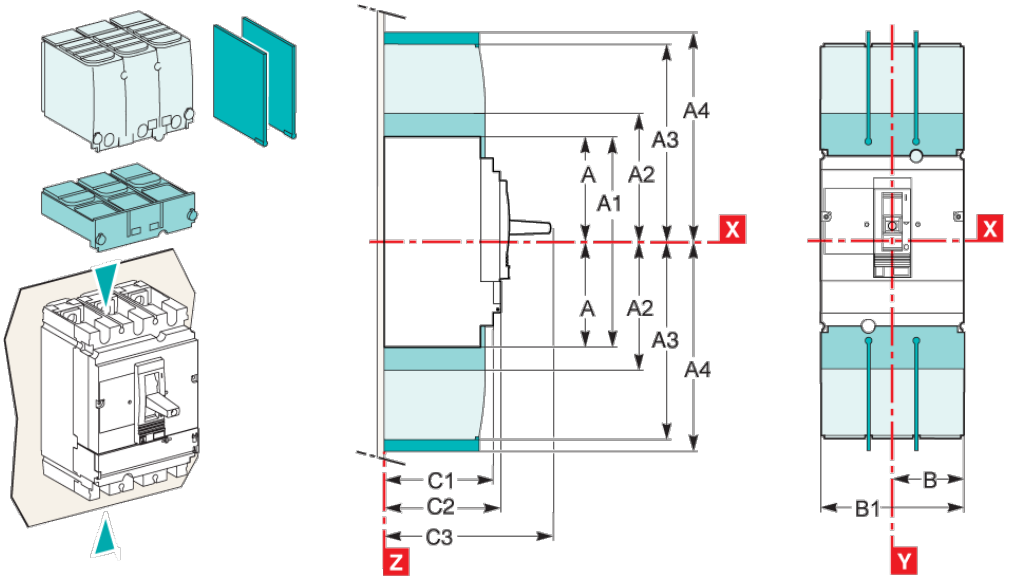


| Type | A | A1 | A2 | A3 | A4 | A5 | A6 | A7 | A8 | A9 | B | B1 | B2 | C1 | C2 | C3 | E1 |
|---|---|---|---|---|---|---|---|---|---|---|---|---|---|---|---|---|---|
| CVS100/160/250 | 80.5 | 161 | 64 | 145 | 179.5 | 155.5 | 236 | 169 | 220 | 253.5 | 52.5 | 105 | 140 | 81 | 66 | 111[2] | 62.5 |
| CVS400/630 | 127.5 | 255 | 142.5 | 200 | 237 | 227.5 | 355 | 242.5 | 300 | 337 | 70 | 140 | 185 | 95.5 | 110 | 168 | 100 |
| **Type** | **E2** | **E3** | **E4** | **E5** | **E6** | **E7** | **E8** | **F1** | **F2** | **F3** | **G1** | **G2** | **G3** | **G4** | **G5** | **ØT** | **U** |
| CVS100/160/250 | 125 | 70 | 140 | 137.5 | 200 | 145 | 215 | 35 | 17.5 | 70 | 55 | 75 | 13.5 | 33 | 17.5 | 24 | y 32 |
| CVS400/630 | 200 | 113.5 | 227 | 200 | 300 | 213.5 | 327 | 45 | 22.5 | 90 | - | - | - | - | - | 32 | y 35 |

[2] C3=126mm for EasyPact CVS2500/F.

Assembly

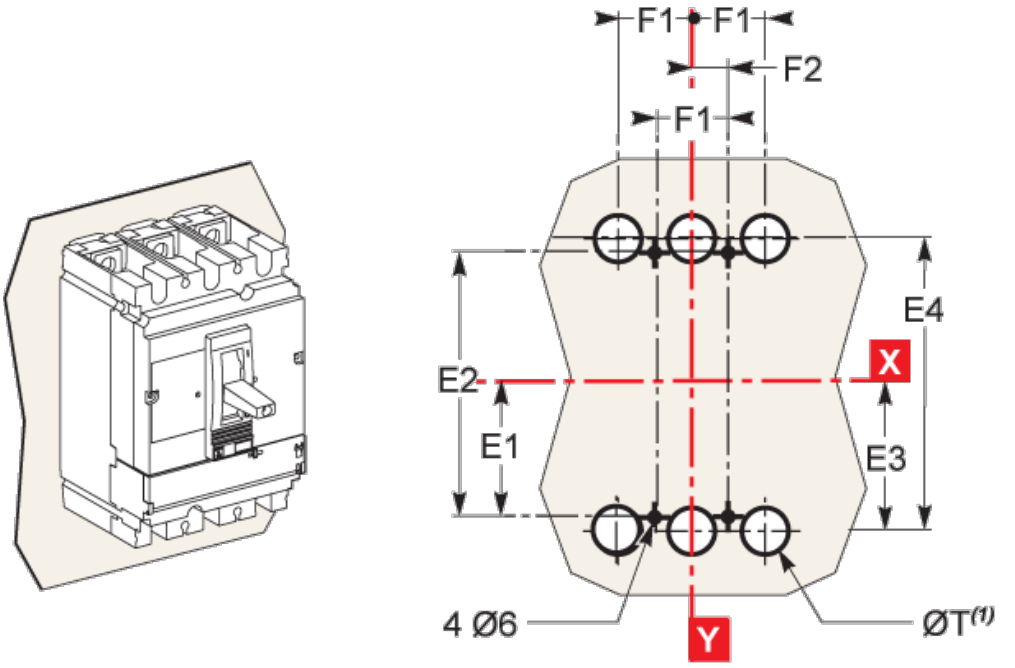


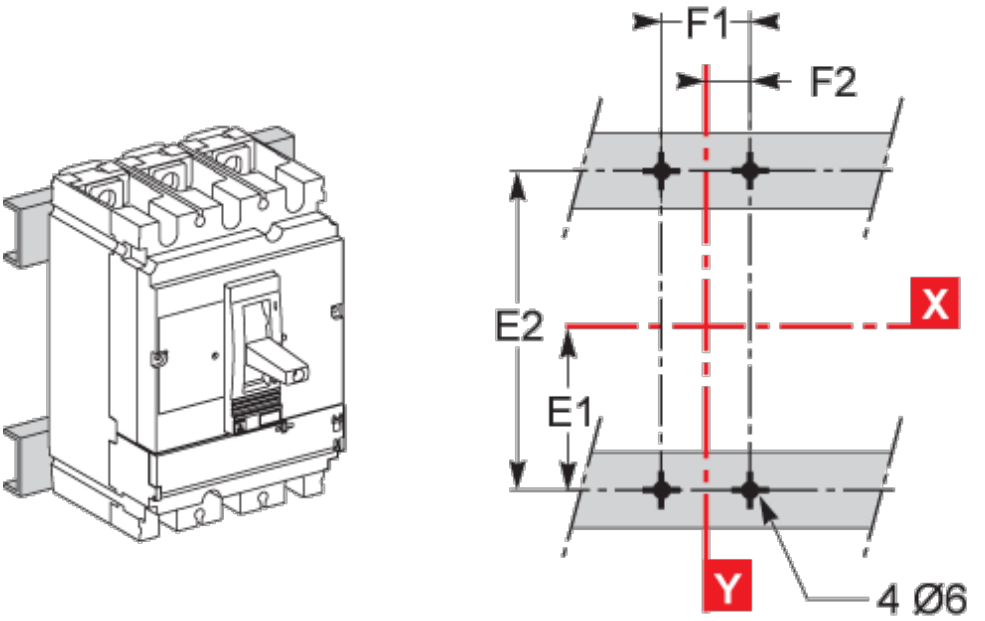


| Type | A | A1 | A2 | A3 | A4 | A5 | A6 | A7 | A8 | A9 | B | B1 | B2 | C1 | C2 | C3 | E1 |
|---|---|---|---|---|---|---|---|---|---|---|---|---|---|---|---|---|---|
| CVS100/160/250 | 80.5 | 161 | 84 | 145 | 170.5 | 155.5 | 236 | 169 | 220 | 253.5 | 52.5 | 105 | 140 | 91 | 86 | 111(2) | 62.5 |
| CVS400/630 | 127.5 | 255 | 142.5 | 200 | 237 | 227.5 | 355 | 242.5 | 300 | 337 | 70 | 140 | 185 | 95.5 | 110 | 168 | 100 |
| **Type** | **E2** | **E3** | **E4** | **E5** | **E6** | **E7** | **E8** | **F1** | **F2** | **F3** | **G1** | **G2** | **G3** | **G4** | **G5** | **ØT** | **U** |
| CVS100/160/250 | 125 | 70 | 140 | 137.5 | 200 | 145 | 215 | 35 | 17.5 | 70 | 55 | 75 | 13.5 | 23 | 17.5 | 24 | y 32 |
| CVS400/630 | 200 | 113.5 | 227 | 200 | 300 | 213.5 | 327 | 45 | 22.5 | 90 | - | - | - | - | - | 32 | y 35 |

(2) C3=126mm for EasyPact CVS250N/F.
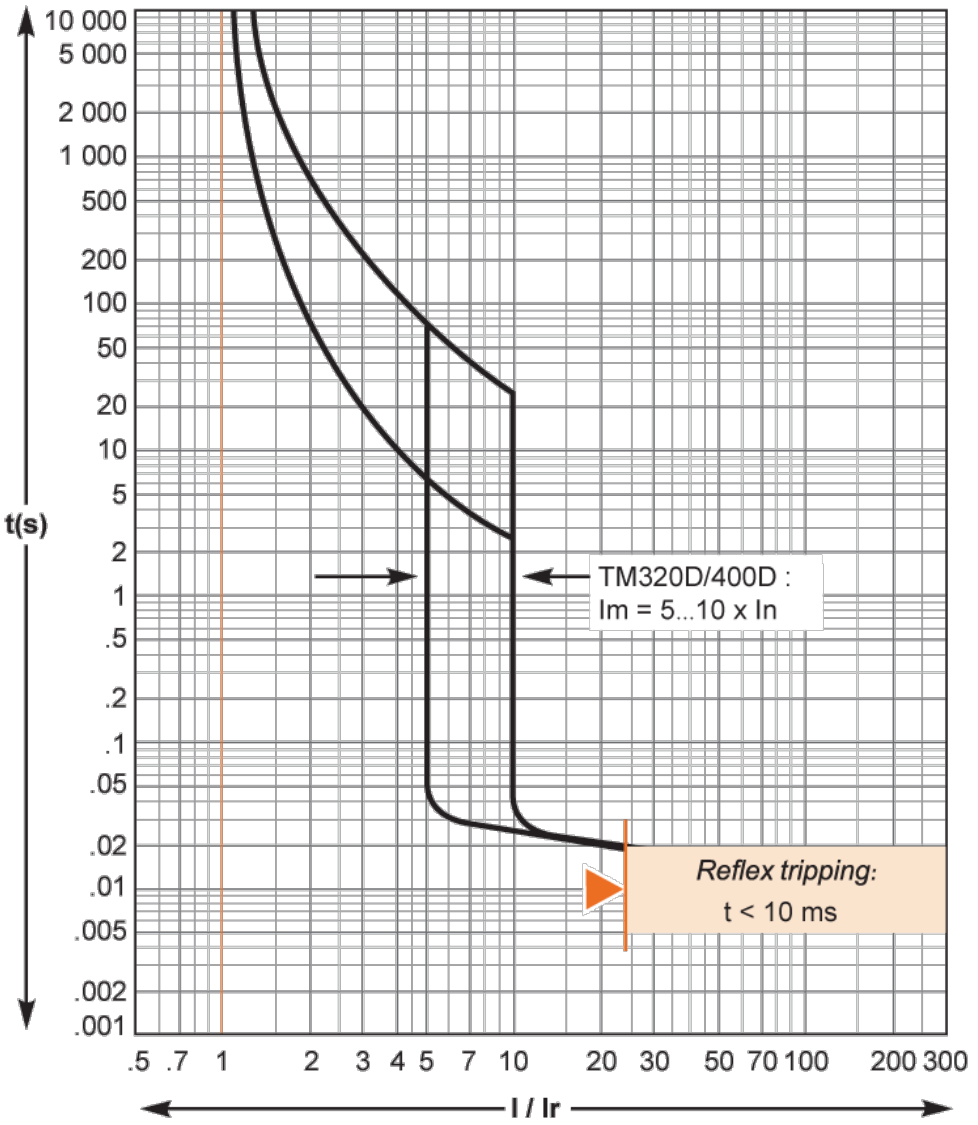
Performance Curves