Product datasheet

Specifications

Green Premium™

Circuit breaker, EasyPact MVS, 3 Poles, 1600A, 50kA, MDO, ET6, drawout, manual

MVS16N3MW6L

Main

Range	EasyPact
Product Name	MVS16N
Device Short Name	MVS16N
Product Or Component Type	Circuit breaker
Device Application	Distribution
Poles Description	3P
Protected Poles Description	3P 3d
[In] Rated Current	1600 A at 40 °C
Network Type	AC
[Ue] Rated Operational Voltage	690 V AC 50/60 Hz conforming to IEC 60947-2
Breaking Capacity Code	N
Suitability For Isolation	Yes conforming to IEC 60947-2
Utilisation Category	Category B
Trip Unit Name	ET6G
Trip Unit Technology	Electronic
Trip Unit Rating	1600 A

Complementary

Network Frequency	50/60 Hz
Control Type	Manually operated
Mounting Mode	Drawout
Mounting Support	Rail Base plate
Connection Position	Vertical Horizontal
Location Of Connection	Rear
[Ui] Rated Insulation Voltage	1000 V AC 50/60 Hz conforming to IEC 60947-2
[Uimp] Rated Impulse Withstand Voltage	12 kV conforming to IEC 60947-2
Circuit Breaker Ct Rating	1600 A
Breaking Capacity	50 kA Icu at 220...440 V AC 50/60 Hz conforming to IEC 60947-2
[Ics] Rated Service Breaking Capacity	50 kA (Ics) at 220...440 V AC 50/60 Hz conforming to IEC 60947-2

Disclaimer: This documentation is not intended as a substitute for and is not to be used for determining suitability or reliability of these products for specific user applications

Mechanical Durability	20000 cycles (with maintenance) conforming to IEC 60947-2 10000 cycles (without maintenance) conforming to IEC 60947-2
Electrical Durability	Category B: 6000 cycles 440 V AC 50/60 Hz without maintenance conforming to IEC 60947-2 Category B: 4000 cycles 690 V AC 50/60 Hz without maintenance conforming to IEC 60947-2
Connection Pitch	115 mm without spreader
Contact Position Indicator	Yes
[Icm] Rated Short-Circuit Making Capacity	105 kA (Icm) at 220...440 V AC 50/60 Hz conforming to IEC 60947-2
[Icw] Rated Short-Time Withstand Current	50 kA (1 s) at 220...440 V AC 50/60 Hz conforming to IEC 60947-2 42 kA (1 s) at 690 V AC 50/60 Hz conforming to IEC 60947-2 25 kA (3 s) at 440/690 V AC 50/60 Hz conforming to IEC 60947-2
Trip Unit Protection Functions	LSIG
Protection Type	Overload protection (long time) Short time short-circuit protection Earth fault Instantaneous short-circuit protection
Fault Indication	Overload Internal fault Earth fault Short-circuit
Long Time Pick-Up Adjustment Type Ir	Adjustable 9 settings
Long Time Pick-Up Adjustment Range	0.4...1 x In
Long Time Delay Adjustment Type	Adjustable 9 settings
[Tr] Long-Time Delay Adjustment Range	0.5…24 s at 6 x Ir
Short-Time Pick-Up Adjustment Type Isd	Adjustable 9 settings
[Isd] Short-Time Pick-Up Adjustment Range	1.5...10 x Ir
Short-Time Delay Adjustment Type	Adjustable 5 settings
[Tsd] Short-Time Delay Adjustment Range	100…400 ms
Instantaneous Pick-Up Adjustment Type Ii	Adjustable 9 settings
Instantaneous Pick-Up Adjustment Range	2...15 x In Off
Ground-Fault Pick-Up Adjustment Type	Adjustable 9 settings
Ground-Fault Time Delay Adjustment Type -Tg	Adjustable 5 settings
[Tg] Ground-Fault Time Delay Adjustment Range	100…400 ms
[Ig] Ground-Fault Pick-Up Adjustment Range	500...1200 A
Zone Selective Interlocking Zsi	With
Current Sensor Rating Range	400/2000 A
Maximum Breaking Time	25 ms
Maximum Closing Response Time	70 ms
Height	439 mm
Width	441 mm
Depth	395 mm
Net Weight	70 kg

Environment

Standards	IEC 60947-2
Product Certifications	CCC CCS IEC GOST
Pollution Degree	4 conforming to IEC 60664-1
Ip Degree Of Protection	IP40
Ambient Air Temperature For Operation	-5…70 °C
Ambient Air Temperature For Storage	-40…85 °C without control unit -25…85 °C with control unit

Packing Units

Unit Type Of Package 1	PCE
Number Of Units In Package 1	1
Package 1 Height	42.0 cm
Package 1 Width	35.0 cm
Package 1 Length	50.0 cm
Package 1 Weight	38.0 kg

Contractual warranty

Warranty	18 months

Sustainability

Green Premium™ label is Schneider Electric's commitment to delivering products with best-in-class environmental performance. Green Premium promises compliance with the latest regulations, transparency on environmental impacts, as well as circular and low-CO_2 products.

Guide to assessing product sustainability is a white paper that clarifies global eco-label standards and how to interpret environmental declarations.

Learn more about Green Premium >

Guide to assess a product's sustainability >

Transparency RoHS/REACh

Well-being performance

Mercury Free	
Rohs Exemption Information	Yes
Pvc Free	

Certifications & Standards

Reach Regulation	REACh Declaration
Eu Rohs Directive	Compliant with Exemptions
China Rohs Regulation	China RoHS declaration Product out of China RoHS scope. Substance declaration for your information
Environmental Disclosure	Product Environmental Profile
Circularity Profile	End of Life Information

Dimensions Drawings

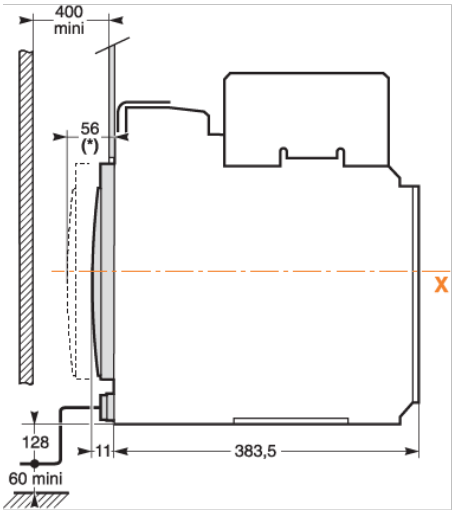

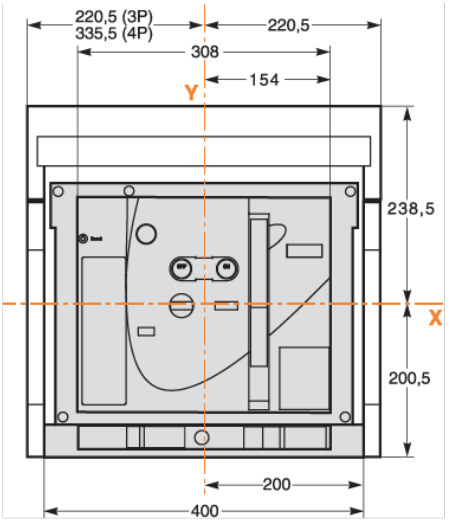

Assembly

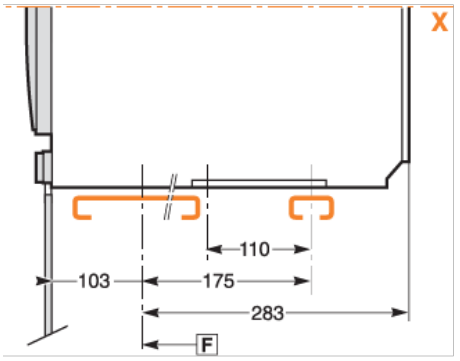
X
110
103
175
283
F

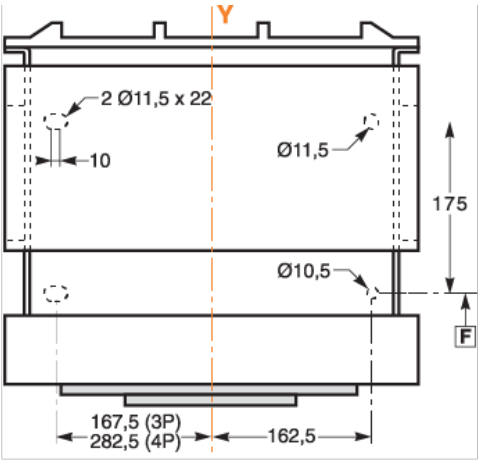
Y
2 Ø11,5 x 22
10
Ø11,5
175
Ø10,5
F
167,5 (3P)
282,5 (4P)
162,5

Performance Curves

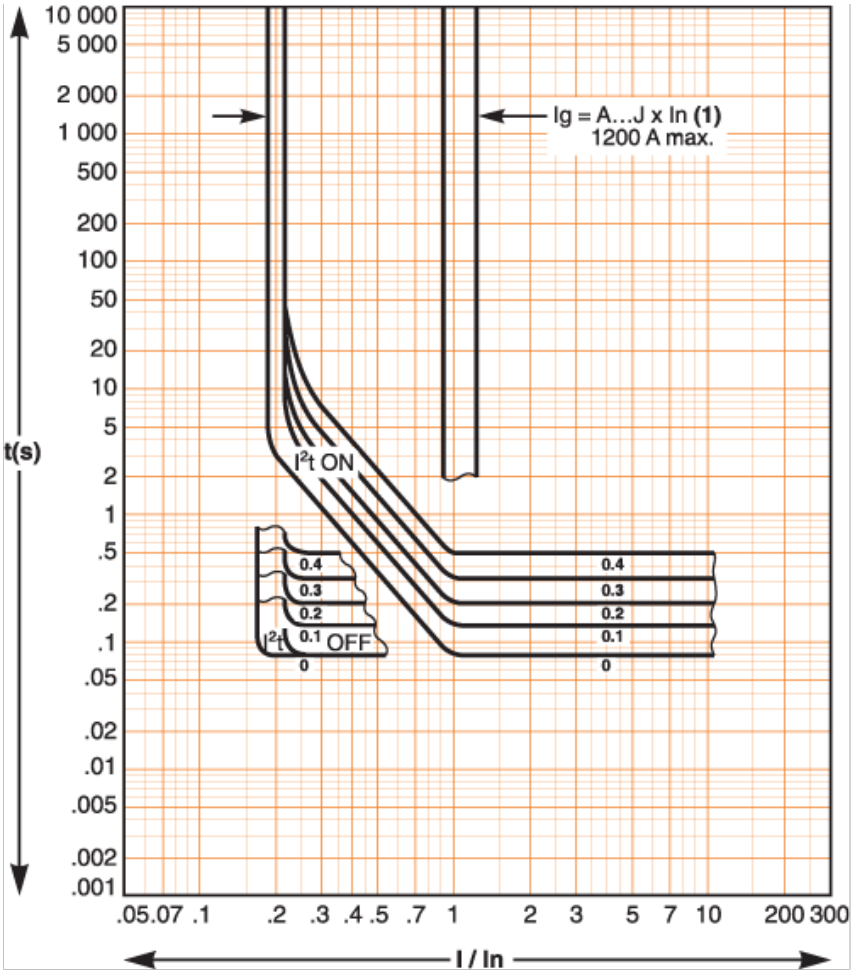

(1)

Ig = In x...	A	B	C	D	E	F	G	H	J
In ⩽ 400 A	0.3	0.3	0.4	0.5	0.6	0.7	0.8	0.9	1
400 A < In ⩽ 1000 A	0.2	0.3	0.4	0.5	0.6	0.7	0.8	0.9	1
In ⩾ 1250A	500	640	720	800	880	960	1040	1120	1200

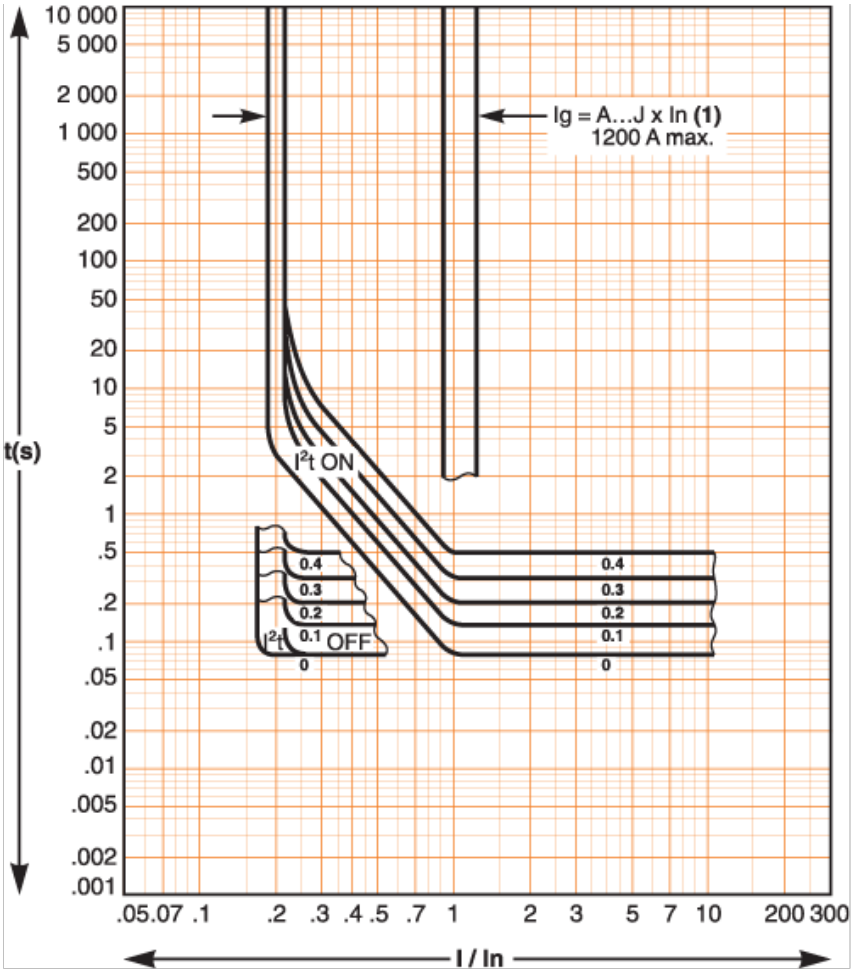

(1)

Ig = In x...	A	B	C	D	E	F	G	H	J
In ≤ 400 A	0.3	0.3	0.4	0.5	0.6	0.7	0.8	0.9	1
400 A < In ≤ 1000 A	0.2	0.3	0.4	0.5	0.6	0.7	0.8	0.9	1
In ≥ 1250A	500	640	720	800	880	960	1040	1120	1200