# Product datasheet

Specifications

Green Premium™

## Circuit breaker, EasyPact MVS, 3 Poles, 3200A, 50kA, MDO, ET6, drawout, manual

MVS32N3MW6L

## Main

| | |
|---|---|
| **Range** | EasyPact |
| **Product Name** | MVS32N |
| **Device Short Name** | MVS32N |
| **Product Or Component Type** | Circuit breaker |
| **Device Application** | Distribution |
| **Poles Description** | 3P |
| **Protected Poles Description** | 3P 3d |
| **[In] Rated Current** | 3200 A at 40 °C |
| **Network Type** | AC |
| **[Ue] Rated Operational Voltage** | 690 V AC 50/60 Hz conforming to IEC 60947-2 |
| **Breaking Capacity Code** | N |
| **Suitability For Isolation** | Yes conforming to IEC 60947-2 |
| **Utilisation Category** | Category B |
| **Trip Unit Name** | ET6G |
| **Trip Unit Technology** | Electronic |
| **Trip Unit Rating** | 3200 A |

## Complementary

| | |
|---|---|
| **Network Frequency** | 50/60 Hz |
| **Control Type** | Manually operated |
| **Mounting Mode** | Drawout |
| **Mounting Support** | Base plate<br>Rail |
| **Connection Position** | Vertical<br>Horizontal |
| **Location Of Connection** | Rear |
| **[Ui] Rated Insulation Voltage** | 1000 V AC 50/60 Hz conforming to IEC 60947-2 |
| **[Uimp] Rated Impulse Withstand Voltage** | 12 kV conforming to IEC 60947-2 |
| **Circuit Breaker Ct Rating** | 3200 A |
| **Breaking Capacity** | 50 kA Icu at 220...440 V AC 50/60 Hz conforming to IEC 60947-2 |
| **[Ics] Rated Service Breaking Capacity** | 50 kA (Ics) at 220...440 V AC 50/60 Hz conforming to IEC 60947-2 |

Disclaimer: This documentation is not intended as a substitute for and is not to be used for determining suitability or reliability of these products for specific user applications

| | |
|---|---|
| **Mechanical Durability** | 20000 cycles (with maintenance) conforming to IEC 60947-2<br>10000 cycles (without maintenance) conforming to IEC 60947-2 |
| **Electrical Durability** | Category B: 5000 cycles 440 V AC 50/60 Hz without maintenance conforming to IEC 60947-2<br>Category B: 2500 cycles 690 V AC 50/60 Hz without maintenance conforming to IEC 60947-2 |
| **Connection Pitch** | 115 mm without spreader |
| **Contact Position Indicator** | Yes |
| **[Icm] Rated Short-Circuit Making Capacity** | 105 kA (Icm) at 220...440 V AC 50/60 Hz conforming to IEC 60947-2 |
| **[Icw] Rated Short-Time Withstand Current** | 50 kA (1 s) at 220...440 V AC 50/60 Hz conforming to IEC 60947-2<br>42 kA (1 s) at 690 V AC 50/60 Hz conforming to IEC 60947-2<br>25 kA (3 s) at 440/690 V AC 50/60 Hz conforming to IEC 60947-2 |
| **Trip Unit Protection Functions** | LSIG |
| **Protection Type** | Earth fault<br>Instantaneous short-circuit protection<br>Short time short-circuit protection<br>Overload protection (long time) |
| **Fault Indication** | Internal fault<br>Overload<br>Earth fault<br>Short-circuit |
| **Long Time Pick-Up Adjustment Type Ir** | Adjustable 9 settings |
| **Long Time Pick-Up Adjustment Range** | 0.4...1 x In |
| **Long Time Delay Adjustment Type** | Adjustable 9 settings |
| **[Tr] Long-Time Delay Adjustment Range** | 0.5…24 s at 6 x Ir |
| **Short-Time Pick-Up Adjustment Type Isd** | Adjustable 9 settings |
| **[Isd] Short-Time Pick-Up Adjustment Range** | 1.5...10 x Ir |
| **Short-Time Delay Adjustment Type** | Adjustable 5 settings |
| **[Tsd] Short-Time Delay Adjustment Range** | 100…400 ms |
| **Instantaneous Pick-Up Adjustment Type Ii** | Adjustable 9 settings |
| **Instantaneous Pick-Up Adjustment Range** | 2...15 x In<br>Off |
| **Ground-Fault Pick-Up Adjustment Type** | Adjustable 9 settings |
| **Ground-Fault Time Delay Adjustment Type -Tg** | Adjustable 5 settings |
| **[Tg] Ground-Fault Time Delay Adjustment Range** | 100…400 ms |
| **[Ig] Ground-Fault Pick-Up Adjustment Range** | 500...1200 A |
| **Zone Selective Interlocking Zsi** | With |
| **Current Sensor Rating Range** | 1000/4000 A |
| **Maximum Breaking Time** | 25 ms |
| **Maximum Closing Response Time** | 70 ms |
| **Height** | 439 mm |
| **Width** | 441 mm |
| **Depth** | 395 mm |
| **Net Weight** | 90 kg |

## Environment

| | |
|---|---|
| **Standards** | IEC 60947-2 |
| **Product Certifications** | IEC<br>GOST<br>CCS<br>CCC |
| **Pollution Degree** | 4 conforming to IEC 60664-1 |
| **Ip Degree Of Protection** | IP40 |
| **Ambient Air Temperature For Operation** | -5…70 °C |
| **Ambient Air Temperature For Storage** | -40…85 °C without control unit<br>-25…85 °C with control unit |

## Packing Units

| | |
|---|---|
| **Unit Type Of Package 1** | PCE |
| **Number Of Units In Package 1** | 1 |
| **Package 1 Height** | 42.0 cm |
| **Package 1 Width** | 35.0 cm |
| **Package 1 Length** | 50.0 cm |
| **Package 1 Weight** | 38.0 kg |

## Contractual warranty

| | |
|---|---|
| **Warranty** | 18 months |

## Sustainability

**Green Premium™ label** is Schneider Electric's commitment to delivering products with best-in-class environmental performance. Green Premium promises compliance with the latest regulations, transparency on environmental impacts, as well as circular and low-$CO_2$ products.

**Guide to assessing product sustainability** is a white paper that clarifies global eco-label standards and how to interpret environmental declarations.

Learn more about Green Premium >

Guide to assess a product's sustainability >

Transparency RoHS/REACh

## Well-being performance

| | |
|---|---|
| Mercury Free | |
| Rohs Exemption Information | Yes |
| Pvc Free | |

## Certifications & Standards

| | |
|---|---|
| **Reach Regulation** | REACh Declaration |
| **Eu Rohs Directive** | Compliant with Exemptions |
| **China Rohs Regulation** | China RoHS declaration<br>Product out of China RoHS scope. Substance declaration for your information |
| **Environmental Disclosure** | Product Environmental Profile |
| **Circularity Profile** | End of Life Information |

## Dimensions Drawings

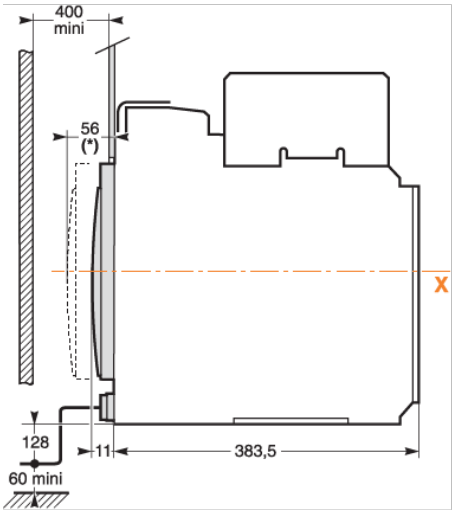


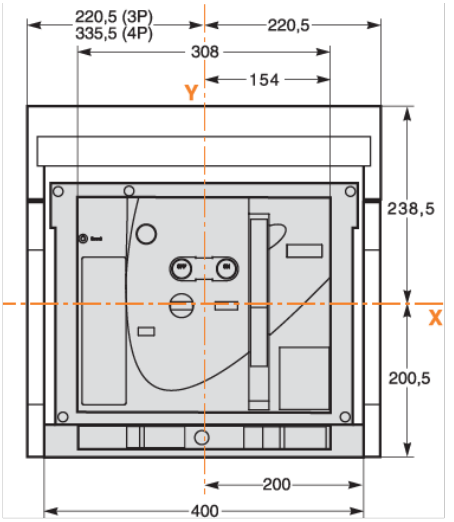

Assembly

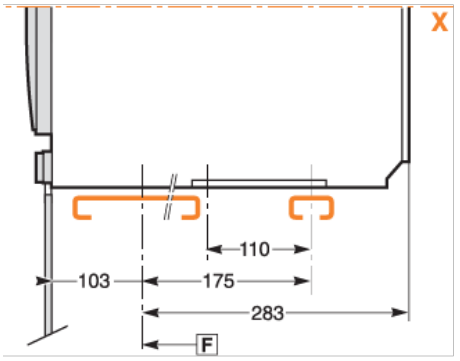
X
110
103
175
283
F

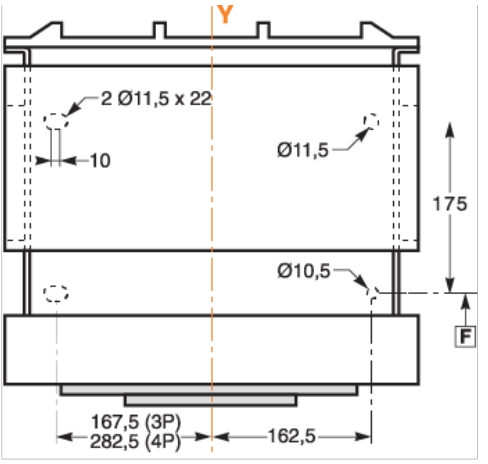
Y
2 Ø11,5 x 22
10
Ø11,5
175
Ø10,5
F
167,5 (3P)
282,5 (4P)
162,5

Performance Curves

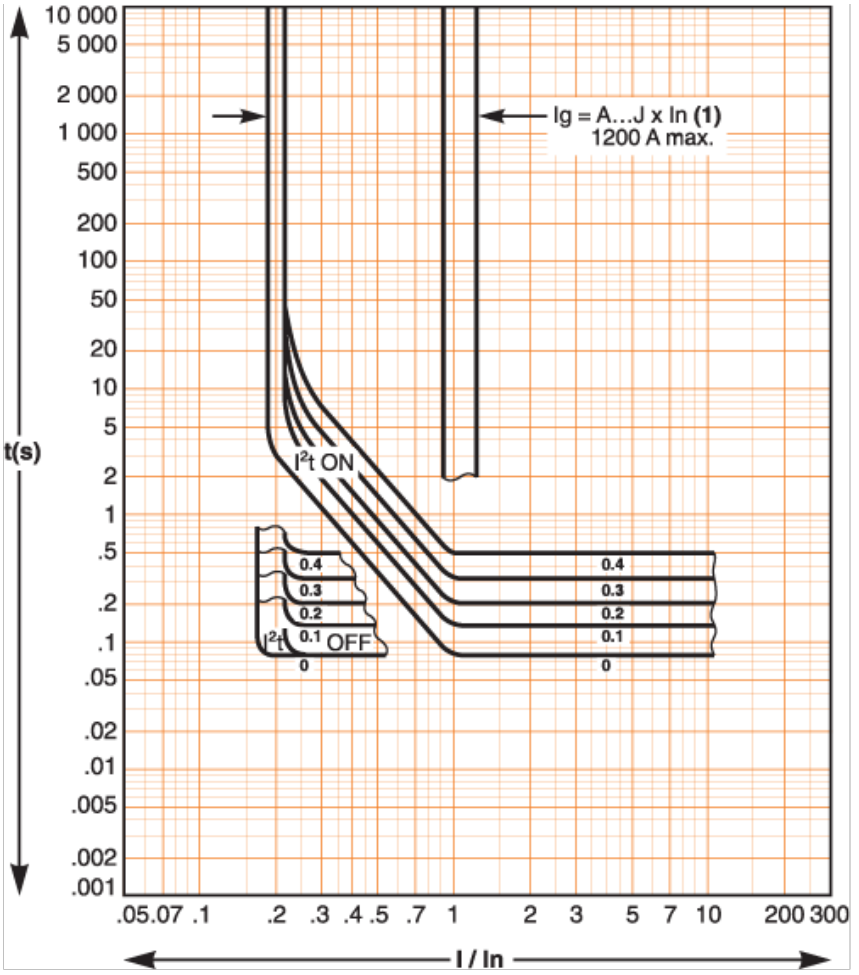


*(1)*

| Ig = In x... | A | B | C | D | E | F | G | H | J |
|---|---|---|---|---|---|---|---|---|---|
| In ⩽ 400 A | 0.3 | 0.3 | 0.4 | 0.5 | 0.6 | 0.7 | 0.8 | 0.9 | 1 |
| 400 A < In ⩽ 1000 A | 0.2 | 0.3 | 0.4 | 0.5 | 0.6 | 0.7 | 0.8 | 0.9 | 1 |
| In ⩾ 1250A | 500 | 640 | 720 | 800 | 880 | 960 | 1040 | 1120 | 1200 |

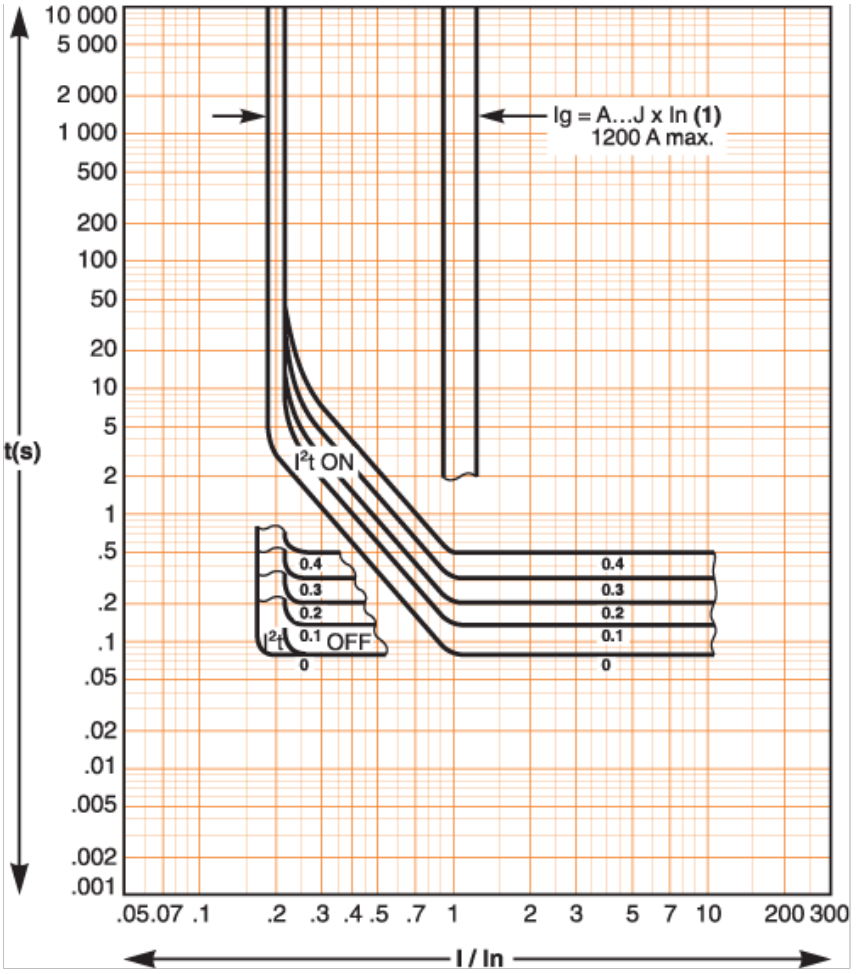


*(1)*

| Ig = In x... | A | B | C | D | E | F | G | H | J |
|---|---|---|---|---|---|---|---|---|---|
| In ≤ 400 A | 0.3 | 0.3 | 0.4 | 0.5 | 0.6 | 0.7 | 0.8 | 0.9 | 1 |
| 400 A < In ≤ 1000 A | 0.2 | 0.3 | 0.4 | 0.5 | 0.6 | 0.7 | 0.8 | 0.9 | 1 |
| In ≥ 1250A | 500 | 640 | 720 | 800 | 880 | 960 | 1040 | 1120 | 1200 |