Product datasheet

Specifications

Green Premium™

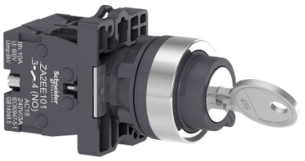

Complete selector switch, Easy Harmony XA2, plastic, black, 22mm, key 455, 3 positions, key withdrawal in any position, stay put, 2NO

XA2EG03

Main

Range Of Product	Easy Harmony XA2
Product Or Component Type	Complete selector switch
Device Short Name	XA2
Bezel Material	Plastic
Fixing Collar Material	Plastic
Mounting Diameter	22.5 mm

Complementary

Fixing Center	>= 30 x 40 mm (panel) - thickness: 1…5 mm
Fixing Mode	Fixing nut: 2…2.4 N.m
Type Of Operator	stay put
Operator Profile	key switch
Operator Position Information	3 positions 45°
Key Number	455
Key Withdrawal Position	Left, right and center
Contacts Type And Composition	2 NO
Contact Operation	Slow-break
Mechanical Durability	100000 cycles
Connections - Terminals	Faston terminals, connection size: 6.3 mm Screw clamp terminals, clamping capacity: <= 1 x 2.5 mm² Screw clamp terminals, clamping capacity: <= 2 x 1.5 mm² Screw clamp terminals, clamping capacity: >= 1 x 0.5 mm²
Tightening Torque	0.8 N.m
Short-Circuit Protection	10 A fuse type gL conforming to IEC 60269-1
[Ith] Conventional Free Air Thermal Current	10 A
[Ui] Rated Insulation Voltage	600 V
[Uimp] Rated Impulse Withstand Voltage	6 kV conforming to IEC 60947-1
[Ie] Rated Operational Current	3 A at 240 V, AC-15, A600 0.27 A at 250 V, DC-13, Q600
Electrical Durability	500000 cycles, AC-15, 3 A at 230 V, operating rate <60 cyc/mn, load factor: 0.5 conforming to IEC 60947-5-4 500000 cycles, DC-13, 0.2 A at 110 V, operating rate <60 cyc/mn, load factor: 0.5 conforming to IEC 60947-5-4

Disclaimer: This documentation is not intended as a substitute for and is not to be used for determining suitability or reliability of these products for specific user applications

Electrical Reliability	Λ < 10exp(-8) at 24 V
Width	30 mm
Height	42 mm
Depth	85.7 mm
Net Weight	0.078 kg
Type Of Operator	Stay put
Operator Profile	Key switch
Head Type	Standard

Environment

Protective Treatment	TC
Ambient Air Temperature For Storage	-40…70 °C
Ambient Air Temperature For Operation	-20…55 °C
Overvoltage Category	Class I conforming to IEC 536
Ip Degree Of Protection	IP54 conforming to IEC 60529
Ik Degree Of Protection	IK03 conforming to IEC 60529
Standards	GB 14048.5 IEC 60947-1 IEC 60947-5-1 GB 14048.1
Product Certifications	CCC CE
Vibration Resistance	10 gn (f= 40…500 Hz) conforming to IEC 60068-2-6
Shock Resistance	70 gn (duration = 11 ms) for half sine wave acceleration conforming to IEC 60068-2-27

Packing Units

Unit Type Of Package 1	PCE
Number Of Units In Package 1	1
Package 1 Height	11.0 cm
Package 1 Width	16.0 cm
Package 1 Length	4.0 cm
Package 1 Weight	93.0 g
Unit Type Of Package 2	CAR
Number Of Units In Package 2	100
Package 2 Height	30.0 cm
Package 2 Width	40.0 cm
Package 2 Length	15.0 cm
Package 2 Weight	9.35 kg
Unit Type Of Package 3	PAL
Number Of Units In Package 3	2000
Package 3 Height	60.0 cm
Package 3 Width	80.0 cm

Package 3 Length	90.0 cm
Package 3 Weight	186.2 kg

Sustainability

Green Premium™ label is Schneider Electric's commitment to delivering products with best-in-class environmental performance. Green Premium promises compliance with the latest regulations, transparency on environmental impacts, as well as circular and low-CO_2 products.

Guide to assessing product sustainability is a white paper that clarifies global eco-label standards and how to interpret environmental declarations.

Learn more about Green Premium >

Guide to assess a product's sustainability >

Transparency RoHS/REACh

Well-being performance

Reach Free Of Svhc	
Mercury Free	
Rohs Exemption Information	Yes

Certifications & Standards

Reach Regulation	REACh Declaration
Eu Rohs Directive	Pro-active compliance (Product out of EU RoHS legal scope) EU RoHS Declaration
China Rohs Regulation	China RoHS declaration
Environmental Disclosure	Product Environmental Profile
Weee	The product must be disposed on European Union markets following specific waste collection and never end up in rubbish bins
Circularity Profile	End of Life Information

Dimensions Drawings

Dimensions

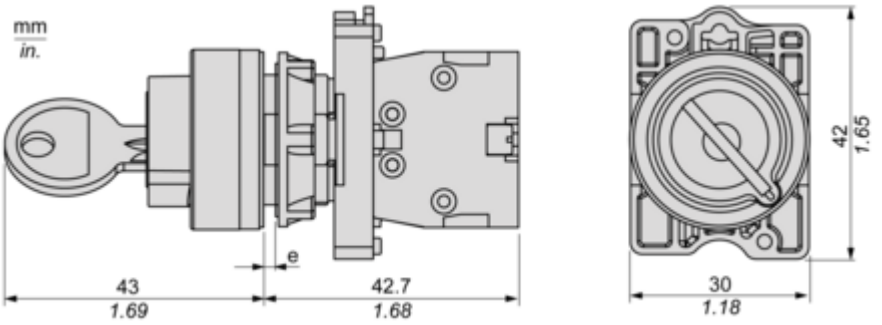

(e) Clamping thickness: 1 to 6 mm / 0.04 to 0.24 in.

Mounting and Clearance

Panel Cut-out for Pushbuttons, Switches and Pilot Lights (Finished Holes, Ready for Installation)

Connection by Screw Clamp Terminals

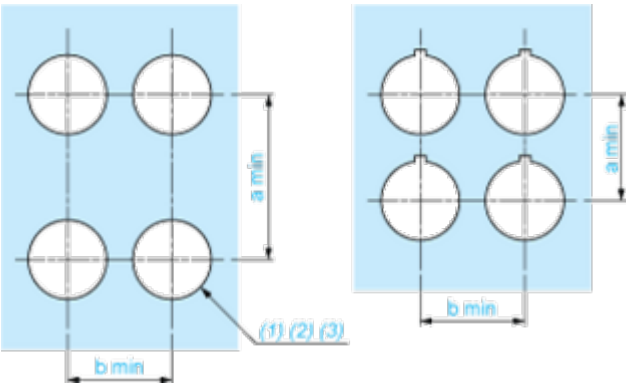

(1) Diameter on finished panel or support
(2) For selector switches and Emergency stop buttons, use of an anti-rotation plate type ZB5AZ902 is recommended.
(3) Ø22.5 mm recommended (Ø22.3 $_{0}^{+0.4}$) / Ø0.89 in. recommended (Ø0.88 in. $_{0}^{+0.016}$)

Connections	a in mm	a in in.	b in mm	b in in.
By screw clamp terminals connector	40	1.57	30	1.18
By Faston connectors	45	1.77	32	1.26

Detail of Lug Recess

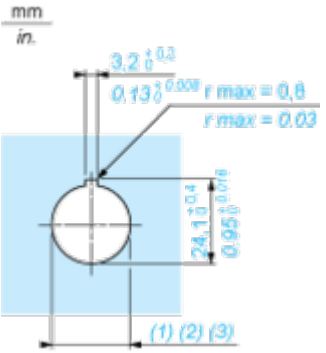

(1) Diameter on finished panel or support
(2) For selector switches and Emergency stop buttons, use of an anti-rotation plate type ZB5AZ902 is recommended.
(3) Ø22.5 mm recommended (Ø22.3 $_{0}^{+0.4}$) / Ø0.89 in. recommended (Ø0.88 in. $_{0}^{+0.016}$)