Product datasheet

Specifications

Green Premium™

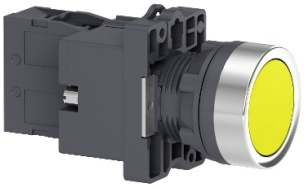

Complete illuminated push button, Easy Harmony XA2, plastic, flush, amber, 22mm, spring return, 24V AC DC, 1NO

XA2EW35B1

Main

Range Of Product	Easy Harmony XA2
Product Or Component Type	Complete illuminated push-button
Device Short Name	XA2
Bezel Material	Plastic
Mounting Diameter	22.5 mm

Complementary

Sale Per Indivisible Quantity	1
Protective Treatment	TC
Operating Position	Any position
Fixing Center	>= 30 x 40 mm (panel) - thickness: 1…5 mm
Fixing Mode	Fixing nut recommended torque: 2.2 N.m (Us +/- 10 %)
Shape Of Signaling Unit Head	Round
Type Of Operator	spring return
Operator Profile	Amber flush
Contacts Type And Composition	1 NO
Contact Operation	Slow-break
Mechanical Durability	1500000 cycles
Connections - Terminals	Screw clamp terminals, clamping capacity: 2 x 1.5 mm² Screw clamp terminals, clamping capacity: 1 x 2.5 mm² Faston terminals, connection size: 6.3 mm Screw clamp terminals, clamping capacity: 1 x 0.5 mm²
Tightening Torque	0.8 N.m
Short-Circuit Protection	10 A gL fuse conforming to IEC 60269-1
[Ith] Conventional Free Air Thermal Current	10 A
[Ui] Rated Insulation Voltage	600 V conforming to IEC 60947-4-1
[Uimp] Rated Impulse Withstand Voltage	6 kV conforming to IEC 60947-1
[Ie] Rated Operational Current	0.27 A at 250 V, DC-13, Q600 3 A at 240 V, AC-15, A600
Electrical Durability	500000 cycles, DC-13, 0.2 A at 110 V, operating rate <60 cyc/mn, load factor: 0.5 conforming to IEC 60947-5-4 500000 cycles, DC-13, 3 A at 230 V, operating rate <60 cyc/mn, load factor: 0.5 conforming to IEC 60947-5-4
Signalling Type	Steady

Disclaimer: This documentation is not intended as a substitute for and is not to be used for determining suitability or reliability of these products for specific user applications

Light Source	LED
Bulb Base	BA 9s
[Us] Rated Supply Voltage	24 V AC/DC 50/60 Hz
Supply Voltage Limits	19…26 V AC/DC
Current Consumption	< 20 mA
Service Life	10000 h
Width	30 mm
Height	42 mm
Depth	74.5 mm
Net Weight	0.056 kg
Cap/Operator Or Lens Colour	Yellow
Type Of Operator	Spring return
[Us] Rated Supply Voltage	24 V

Environment

Ambient Air Temperature For Storage	-40…70 °C
Ambient Air Temperature For Operation	-25…55 °C
Overvoltage Category	Class I conforming to IEC 536
Ip Degree Of Protection	IP65
Ik Degree Of Protection	IK03 conforming to IEC 60529
Standards	IEC 60947-5-1 GB 14048.5 IEC 60947-1 GB 14048.1
Product Certifications	CE CCC
Vibration Resistance	10 gn (f= 40…500 Hz) conforming to IEC 60068-2-6
Shock Resistance	70 gn (duration = 11 ms) for half sine wave acceleration conforming to IEC 60068-2-27

Packing Units

Unit Type Of Package 1	PCE
Number Of Units In Package 1	1
Package 1 Height	4.0 cm
Package 1 Width	11.0 cm
Package 1 Length	16.0 cm
Package 1 Weight	60.0 g
Unit Type Of Package 2	BB1
Number Of Units In Package 2	10
Package 2 Height	40.0 cm
Package 2 Width	160.0 cm
Package 2 Length	110.0 cm
Package 2 Weight	600.0 g

Unit Type Of Package 3	S02
Number Of Units In Package 3	70
Package 3 Height	15.0 cm
Package 3 Width	30.0 cm
Package 3 Length	40.0 cm
Package 3 Weight	4.3 kg

Sustainability

Green Premium™ label is Schneider Electric's commitment to delivering products with best-in-class environmental performance. Green Premium promises compliance with the latest regulations, transparency on environmental impacts, as well as circular and low-CO_2 products.

Guide to assessing product sustainability is a white paper that clarifies global eco-label standards and how to interpret environmental declarations.

Learn more about Green Premium >

Guide to assess a product's sustainability >

RoHS/REACh

Well-being performance

Reach Free Of Svhc	
Mercury Free	
Rohs Exemption Information	Yes

Certifications & Standards

Reach Regulation	REACh Declaration
Eu Rohs Directive	Pro-active compliance (Product out of EU RoHS legal scope) EU RoHS Declaration
China Rohs Regulation	China RoHS declaration
Weee	The product must be disposed on European Union markets following specific waste collection and never end up in rubbish bins

Dimensions Drawings

Dimensions

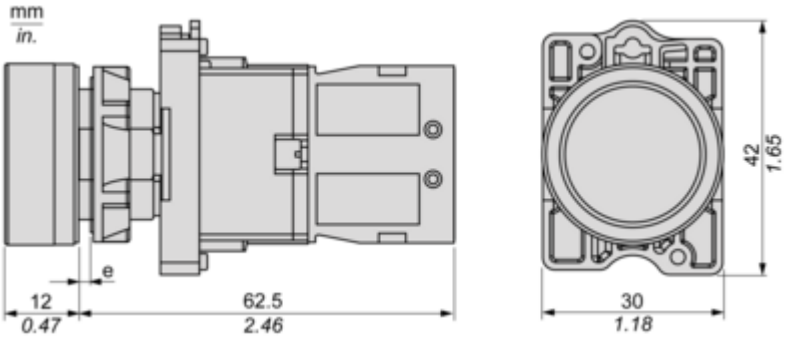

(e) Clamping thickness: 1 to 6 mm / 0.04 to 0.24 in.

Mounting and Clearance

Panel Cut-out for Pushbuttons, Switches and Pilot Lights (Finished Holes, Ready for Installation)

Connection by Screw Clamp Terminals

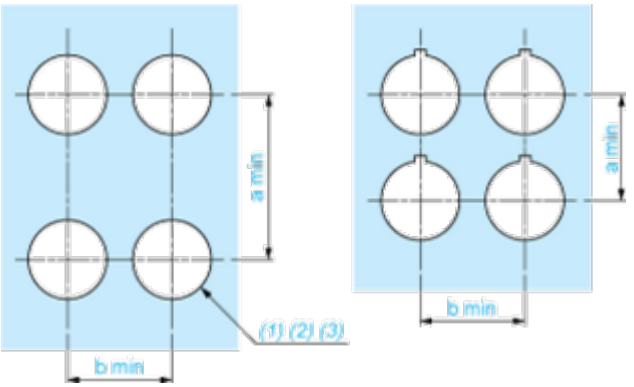

(1) Diameter on finished panel or support
(2) For selector switches and Emergency stop buttons, use of an anti-rotation plate type ZB5AZ902 is recommended.
(3) Ø22.5 mm recommended (Ø22.3 $_{0}^{+0.4}$) / Ø0.89 in. recommended (Ø0.88 in. $_{0}^{+0.016}$)

Connections	a in mm	a in in.	b in mm	b in in.
By screw clamp terminals connector	40	1.57	30	1.18
By Faston connectors	45	1.77	32	1.26

Detail of Lug Recess

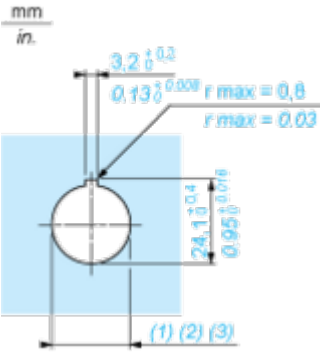

(1) Diameter on finished panel or support
(2) For selector switches and Emergency stop buttons, use of an anti-rotation plate type ZB5AZ902 is recommended.
(3) Ø22.5 mm recommended (Ø22.3 $_{0}^{+0.4}$) / Ø0.89 in. recommended (Ø0.88 in. $_{0}^{+0.016}$)