Product datasheet

Specifications

Green Premium™

Illuminated emergency stop push button, Harmony XB5, plastic, red, mushroom 40mm, 22mm, trigger latching turn to release, 24V DC, 1NO 2NC

XB5AS86449B4

Discontinued

Discontinued on: Nov 20, 2023 AD

Main

Range Of Product	Harmony XB5
Product Or Component Type	Illuminated emergency stop push-button
Device Short Name	XB5
Bezel Material	Plastic
Fixing Collar Material	Plastic
Head Type	Standard
Mounting Diameter	22 mm
Sale Per Indivisible Quantity	1
Local Signalling	1 red LED 24 V DC, current consumption: 7.5 mA
Light Source	LED
[Us] Rated Supply Voltage	21.6...26.4 V
Light Source Colour	Red
Service Life In Hours	30000 h at 25 °C
Shape Of Signaling Unit Head	Round
Type Of Operator	trigger action and mechanical latching with mechanical state indicator
Reset	Turn to release
Operator Profile	Red mushroom Ø 40 mm, unmarked
Contact Operation	Slow-break
Connections - Terminals	Screw clamp terminals, <= 1.25 mm² with cable end conforming to IEC 60947-1 Screw clamp terminals, <= 1.25 mm² without cable end conforming to IEC 60947-1
Device Presentation	Complete product

Complementary

[Us] Rated Supply Voltage	24 V DC at 50 Hz
Supply Voltage Limits	21.6…26.4 V DC
Height	42 mm
Width	42 mm
Depth	79.5 mm

Disclaimer: This documentation is not intended as a substitute for and is not to be used for determining suitability or reliability of these products for specific user applications

Terminals Description Iso N°1	(21-22)NC (11-12)NC (13-14)NO
Net Weight	0.094 kg
Contacts Usage	Monitoring contact
Positive Opening	With conforming to IEC 60947-5-1 appendix K
Mechanical Durability	100000 cycles
Tightening Torque	0.8…1.5 N.m conforming to IEC 60947-1
Shape Of Screw Head	Slotted compatible with flat Ø 5.5 mm screwdriver Cross compatible with JIS No 2 screwdriver Cross compatible with Philips No 2 screwdriver
Contacts Material	Silver alloy - gold plated (Ag/Cu)
Short-Circuit Protection	10 A cartridge fuse type gG conforming to IEC 60947-5
[Ith] Conventional Free Air Thermal Current	5 A conforming to IEC 60947-5-1
[Ui] Rated Insulation Voltage	250 V (pollution degree 2) conforming to IEC 61140
[Uimp] Rated Impulse Withstand Voltage	2.5 kV conforming to IEC 60947-1
[Ie] Rated Operational Current	1.5 A at 240 V, AC-15, B300 conforming to IEC 60947-5-1 3 A at 120 V, AC-15, B300 conforming to IEC 60947-5-1 0.1 A at 250 V, DC-13, R300 conforming to IEC 60947-5-1 0.22 A at 125 V, DC-13, R300 conforming to IEC 60947-5-1
Electrical Durability	100000 cycles, AC-15, 1.5 A at 240 V, operating rate <1800 cyc/h, load factor: 0.4 conforming to IEC 60947-5-1 appendix C 100000 cycles, AC-15, 3 A at 120 V, operating rate <1800 cyc/h, load factor: 0.4 conforming to IEC 60947-5-1 appendix C 100000 cycles, DC-13, 0.1 A at 250 V, operating rate <1800 cyc/h, load factor: 0.4 conforming to IEC 60947-5-1 appendix C 100000 cycles, DC-13, 0.22 A at 125 V, operating rate <1800 cyc/h, load factor: 0.4 conforming to IEC 60947-5-1 appendix C

Environment

Ambient Air Temperature For Storage	-40…80 °C
Ambient Air Temperature For Operation	-20…50 °C
Overvoltage Category	Class II conforming to IEC 61140
Ip Degree Of Protection	IP65 (front face) conforming to IEC 60529 IP2X (back face)
Standards	IEC 60947-1 IEC 60947-5-1 CSA C22.2 No 14 IEC 60947-5-5 IEC 60204-1 ISO 13850 JIS C8201-5-1 UL 508 JIS C8201-1
Product Certifications	UL listed CSA
Vibration Resistance	50 m/s² (f= 10…500 Hz) conforming to IEC 60068-2-6
Shock Resistance	150 m/s² (duration = 11 ms) for half sine wave acceleration conforming to IEC 60068-2-27

Packing Units

Unit Type Of Package 1	PCE
Number Of Units In Package 1	1

Package 1 Height	4.699 cm
Package 1 Width	8.306 cm
Package 1 Length	8.999 cm
Package 1 Weight	150.0 g
Unit Type Of Package 2	S01
Number Of Units In Package 2	12
Package 2 Height	15.0 cm
Package 2 Width	15.0 cm
Package 2 Length	40.0 cm
Package 2 Weight	1.784 kg

Sustainability

Green Premium™ label is Schneider Electric's commitment to delivering products with best-in-class environmental performance. Green Premium promises compliance with the latest regulations, transparency on environmental impacts, as well as circular and low-CO_2 products.

Guide to assessing product sustainability is a white paper that clarifies global eco-label standards and how to interpret environmental declarations.

Learn more about Green Premium >

Guide to assess a product's sustainability >

Transparency RoHS/REACh

Well-being performance

Reach Free Of Svhc	
Toxic Heavy Metal Free	
Mercury Free	
Rohs Exemption Information	Yes

Certifications & Standards

Reach Regulation	REACh Declaration
Eu Rohs Directive	Pro-active compliance (Product out of EU RoHS legal scope) EU RoHS Declaration
China Rohs Regulation	China RoHS declaration
Environmental Disclosure	Product Environmental Profile
Weee	The product must be disposed on European Union markets following specific waste collection and never end up in rubbish bins
Circularity Profile	End of Life Information

Dimensions Drawings

Dimensions

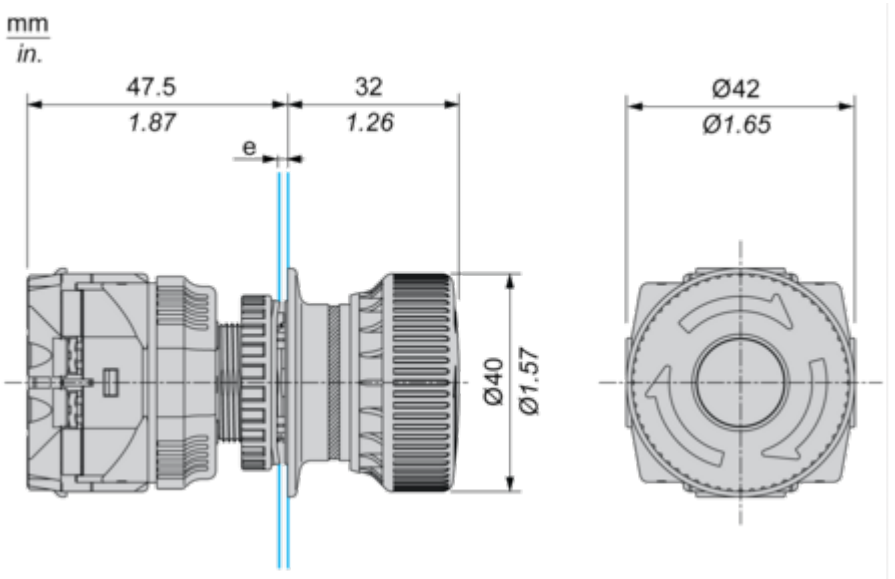

(e) Clamping thickness: 1 mm to 6 mm / 0.03 in to 0.24 in

Mounting and Clearance

Panel Cut-out for Emergency Stop Push Button (Finished Holes, Ready for Installation)

Connection by Screw Clamp Terminals

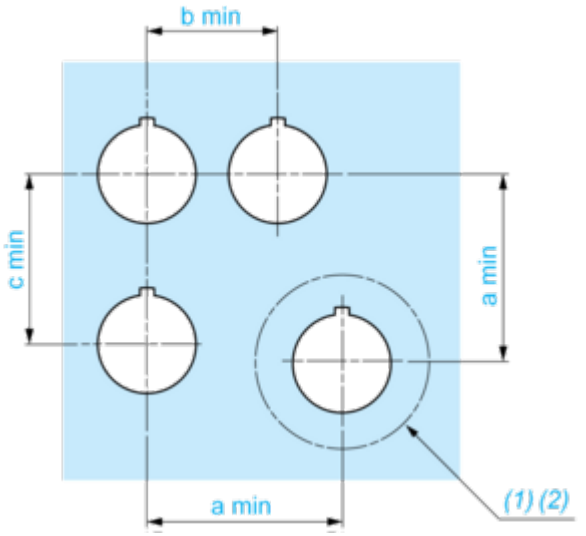

(1) Diameter on finished panel or support
(2) Ø42 mm recommended / Ø1.65 in. recommended (Head diameter)

Connections	a in mm	a in in.	b in mm	b in in.	c in mm	c in in.
By screw terminals	45	1.77	30	1.18	40	1.57

Connection by Screw Clamp Terminals

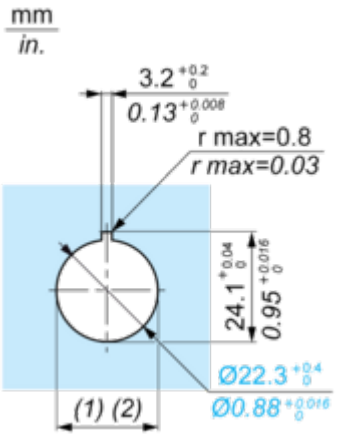

(1) Diameter on finished panel or support
(2) Ø22.5 mm recommended (Ø22.3 0+0.4) / Ø0.89 in. recommended (Ø0.88 in. 0+0.016)