Product datasheet

Specifications

Green Premium™

discrete I/O module Modicon Quantum - 16 I - 115 V AC - 8 O solid state

Local distributor code:

395516186 140DAM59000

Discontinued on: 19 May 2023

To be end-of-service on: 31 Dec 2030

Discontinued - Service only

EAN Code: 3595861126954

Main

Range Of Product	Modicon Quantum automation platform
Product Or Component Type	Mixed discrete I/O module
Discrete I/O Number	24

Complementary

Discrete Input Number	16 2 groups of 8
Addressing Requirement	1 input word 0.5 output word
Network Frequency Limits	47…63 Hz
Discrete Input Voltage	115 V AC
Input Voltage Limits	156 V during 10 s 200 V during one cycle 132 V typical
Voltage State 0 Guaranteed	0...20 V
Voltage State 1 Guaranteed	79...132 V 60 Hz 85...132 V 50 Hz
Current State 0 Guaranteed	<= 0.5 mA
Current State 1 Guaranteed	<= 11 mA 50 Hz <= 13.2 mA 60 Hz
Input Impedance	14400 Ohm capacitive
Response Time	4.9...0.75 ms at at state 0 to state 1 7.3...12.3 ms at at state 1 to state 0
Discrete Output Number	8 2 groups of 4
Discrete Output Type	Solid state
Discrete Output Voltage	115 V
Output Voltage Limits	156 V AC during 10 s 200 V AC during 1 cycle 85...132 V typical AC typical
Minimum Load	5 mA
Maximum Load Current	<= 4 A per point <= 8 A per group <= 8 A per module
Maximum Voltage Drop	<1.5 V

Disclaimer: This documentation is not intended as a substitute for and is not to be used for determining suitability or reliability of these products for specific user applications

Absolute Maximum Output	20 A 2 cycles per point 26 A 3 cycles per group 30 A 1 cycle per point 30 A 2 cycles per group 45 A 1 cycle per group 10 A 3 cycles per point
Dv/Dt	400 V/µs
Maximum Leakage Current	2.1 mA 115 V AC input circuit 2 mA output circuit
Response Time On Output	<= 0.5 ms at state 0 to state 1 <= 0.5 ms at state 1 to state 0
Protection Type	On output by RC filter Internal output protection by 5 A fuse per group
Isolation Between Group	1000 Vrms for 1 minute
Isolation Between Channels And Bus	1780 Vrms for 1 minute
Fault Indication	Loss of field power on output Blown fuse on output
Power Dissipation	5.5 W + (1.1 x total module load current)
External Power Requirement	85...132 V AC for output circuit
Local Signalling	1 LED (green) for bus communication is present (Active) 1 LED (red) for no voltage in output and input (F) 2 LEDs (green) for output is turned on 2 LEDs (red) for fault detected on the input point 2 LEDs (red) for fault detected on the output point
Marking	CE
Bus Current Requirement	250 mA
Net Weight	0.45 kg

Environment

Resistance To Electrostatic Discharge	4 kV contact conforming to IEC 801-2 8 kV on air conforming to IEC 801-2
Resistance To Electromagnetic Fields	10 V/m 80…1000 MHz conforming to IEC 801-3
Ambient Air Temperature For Operation	0…60 °C
Ambient Air Temperature For Storage	-40…85 °C
Relative Humidity	95 % without condensation
Operating Altitude	<= 5000 m
Standards	FM Class 1 Division 2 UL 508 CSA C22.2 No 142
Product Certifications	cUL

Packing Units

Unit Type Of Package 1	PCE
Number Of Units In Package 1	1
Package 1 Height	16.3 cm
Package 1 Width	4.5 cm
Package 1 Length	31.2 cm
Package 1 Weight	560.0 g

Unit Type Of Package 2	S02
Number Of Units In Package 2	2
Package 2 Height	15.0 cm
Package 2 Width	30.0 cm
Package 2 Length	40.0 cm
Package 2 Weight	1.1 kg

Contractual warranty

Warranty	18 months

Sustainability

Green Premium™ label is Schneider Electric's commitment to delivering products with best-in-class environmental performance. Green Premium promises compliance with the latest regulations, transparency on environmental impacts, as well as circular and low-CO_2 products.

Guide to assessing product sustainability is a white paper that clarifies global eco-label standards and how to interpret environmental declarations.

Learn more about Green Premium >

Guide to assess a product's sustainability >

RoHS/REACh

Well-being performance

Reach Free Of Svhc	
Mercury Free	
Rohs Exemption Information	Yes

Certifications & Standards

Eu Rohs Directive	Pro-active compliance (Product out of EU RoHS legal scope) EU RoHS Declaration
China Rohs Regulation	China RoHS declaration
Weee	The product must be disposed on European Union markets following specific waste collection and never end up in rubbish bins
Circularity Profile	End of Life Information

Dimensions Drawings

Racks for Modules Mounting

Dimensions of Modules and Racks

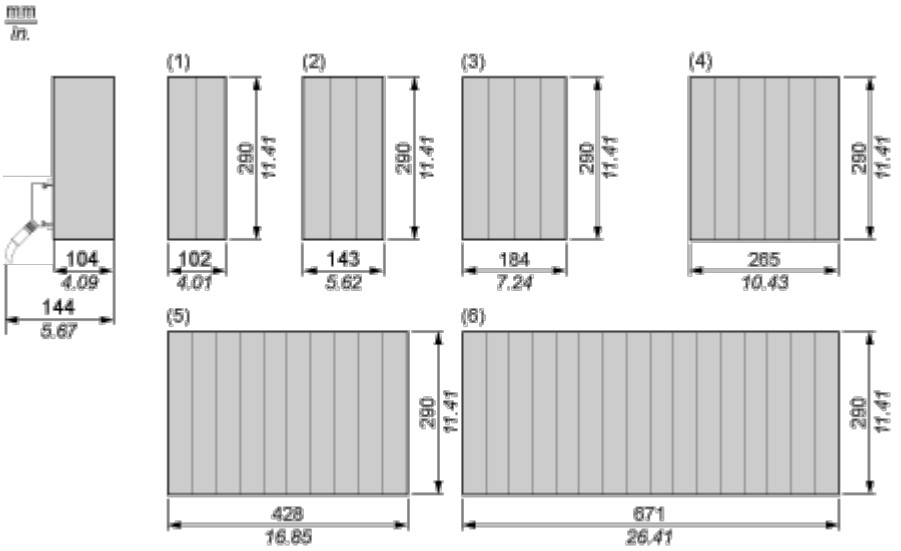

(1) 2 slots

(2) 3 slots

(3) 4 slots

(4) 6 slots

(5) 10 slots

(6) 16 slots

Connections and Schema

115 Vac Discrete Input/Output Module

Wiring Diagram

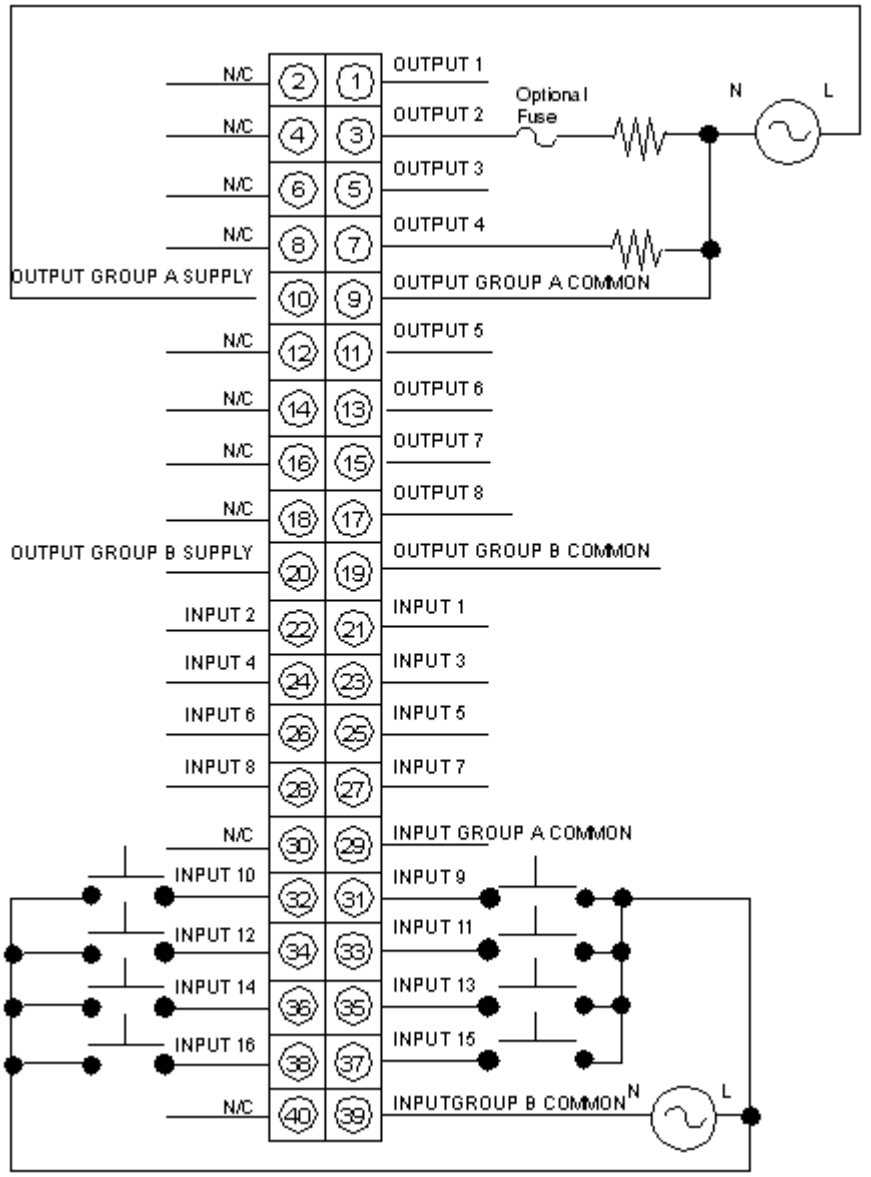

N/C Not Connected