Product datasheet

Specifications

Green Premium™

30MM CONTACT BLOCK 1NC

Local distributor code:

387211839 9001KA3

EAN Code: 3389110918151

Main

Range Of Product	Harmony 9001K Harmony 9001SK
Product Or Component Type	Contact block
Device Short Name	9001K

Complementary

Terminals Description Iso N°1	(3-4)NO
Net Weight	0.023 kg
Contacts Type And Composition	1 NC
Contact Operation	Positive opening
Positive Opening	With conforming to IEC 60947-5-2
Connections - Terminals	Screw clamp terminals, 1 x 0.22...2 x 2.5 mm² conforming to IEC 60947-1
Tightening Torque	0.8 N.m conforming to IEC 60947-1
Shape Of Screw Head	Cross slotted
Contacts Material	Silver alloy contacts
Short-Circuit Protection	10 A cartridge fuse conforming to IEC 60947-5-1
[Ith] Conventional Free Air Thermal Current	10 A
[Ui] Rated Insulation Voltage	250 V (pollution degree 3) conforming to IEC 60947-1
[Uimp] Rated Impulse Withstand Voltage	2.5 kV conforming to IEC 60947-1
[Ie] Rated Operational Current	3 A at 240 V, AC-15, A600-Q600 conforming to NEMA 0.55 A at 125 V, DC-13, A600-Q600 conforming to NEMA
[Icm] Rated Short-Circuit Making Capacity	12 kA at 600 V AC-15, 7200 VA 15 kA at 480 V AC-15, 7200 VA 30 kA at 240 V AC-15, 7200 VA 60 kA at 120 V AC-15, 7200 VA 0.55 kA at 125 V DC-13 0.1 kA at 600 V DC-13 0.27 kA at 250 V DC-13
Rated Breaking Capacity	3 kA at 240 V AC-15, 720 VA 6 kA at 120 V AC-15, 720 VA 1.2 kA at 600 V AC-15, 720 VA 1.5 kA at 480 V AC-15, 720 VA 0.1 kA at 600 V DC-13 0.27 kA at 250 V DC-13 0.55 kA at 125 V DC-13
[Us] Rated Supply Voltage	0...600 V
Connections - Terminals	Screw-clamp terminals

Disclaimer: This documentation is not intended as a substitute for and is not to be used for determining suitability or reliability of these products for specific user applications

Environment

Protective Treatment	TC
Ambient Air Temperature For Storage	-40…70 °C
Ambient Air Temperature For Operation	-25…70 °C
Electrical Shock Protection Class	Class II conforming to IEC 61140
Ip Degree Of Protection	IP20 conforming to IEC 60529
Standards	UL 508 JIS C 4520 JIS C 852 IEC 60947-5-4 CSA C22.2 No 14 IEC 60947-1 IEC 60947-5-1 UL 60947-5-1
Product Certifications	NEMA UL 508
Vibration Resistance	7 gn (f= 2…500 Hz) conforming to IEC 60068-2-6
Shock Resistance	50 gn conforming to IEC 60068-2-27

Packing Units

Unit Type Of Package 1	PCE
Number Of Units In Package 1	1
Package 1 Height	3.500 cm
Package 1 Width	4.200 cm
Package 1 Length	5.100 cm
Package 1 Weight	23.000 g
Unit Type Of Package 2	S01
Number Of Units In Package 2	100
Package 2 Height	15.000 cm
Package 2 Width	15.000 cm
Package 2 Length	40.000 cm
Package 2 Weight	2.357 kg

Contractual warranty

Warranty	18 months

Sustainability

Green Premium™ label is Schneider Electric's commitment to delivering products with best-in-class environmental performance. Green Premium promises compliance with the latest regulations, transparency on environmental impacts, as well as circular and low-CO_2 products.

Guide to assessing product sustainability is a white paper that clarifies global eco-label standards and how to interpret environmental declarations.

Learn more about Green Premium >

Guide to assess a product's sustainability >

Transparency RoHS/REACh

Well-being performance

Mercury Free

Rohs Exemption Information	Yes

Certifications & Standards

Reach Regulation	REACh Declaration
Eu Rohs Directive	Pro-active compliance (Product out of EU RoHS legal scope)
China Rohs Regulation	China RoHS declaration
Environmental Disclosure	Product Environmental Profile
Weee	The product must be disposed on European Union markets following specific waste collection and never end up in rubbish bins
Circularity Profile	No need of specific recycling operations

Dimensions Drawings

Dimensions

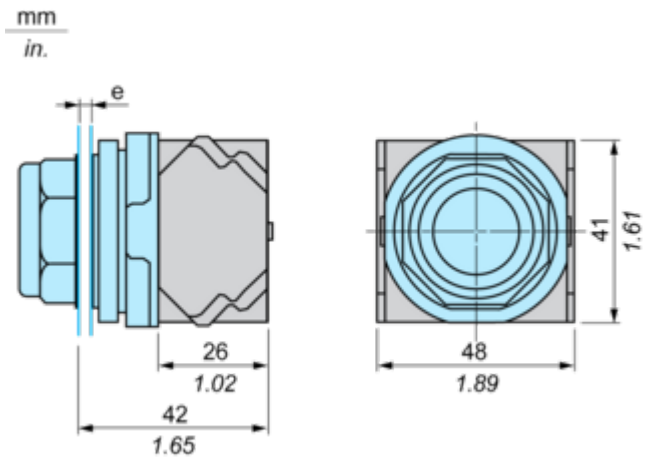

e panel thickness: 1 to 6 mm / 0.04 to 0.24 in.

Mounting and Clearance

Contact Block Mounting Position

Top and Rear views

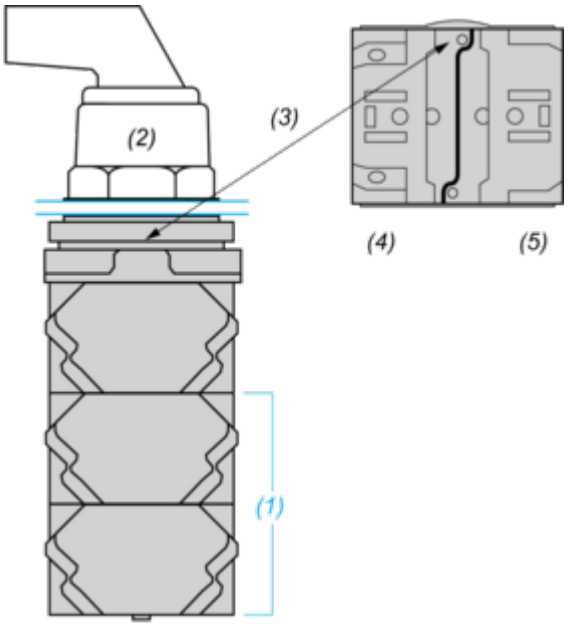

(1) It is possible to mount up to 3 levels of contacts blocks (maximum of 6 contacts blocks)
(2) Operator
(3) Locating notch
(4) Side 1
(5) Side 2