Product datasheet

Specifications

Green Premium™

rectified and filtered power supply - 1 or 2-phase - 400 V AC - 24 V - 2 A

Local distributor code:

389706546 ABL8FEQ24020

To be discontinued on: 30 May 2024

To be end-of-service on: 30 May 2025

To be discontinued

EAN Code: 3389119401319

Main

Range Of Product	Modicon Rectified
Product Or Component Type	Power supply
Power Supply Type	Rectified and filtered
Rated Power In W	48 W
Nominal Input Voltage	230 V AC single phase, terminal(s): N-L1 400 V AC phase to phase, terminal(s): L1-L2
Output Voltage	24 V DC
Power Supply Output Current	2 A
Anti-Harmonic Filter	Low frequency harmonic currents
Product Certifications	cULus KC EAC UL 508

Complementary

Network Frequency Limits	47…63 Hz
Input Voltage Limits	207...253 V 360...440 V
Power Factor	0.737 at 230 V 0.863 at 400 V
Efficiency	75 %
Power Dissipation In W	12 W
Output Coupling	Parallel Series
Output Protection Type	Against overload and short-circuits, protection technology: internal fuse, 2 A, 5 x 20 mm, T curve Against overvoltage, protection technology: 2 J peak limiter
Hold-Up Time	14 ms
Status Led	1 LED (green) output voltage 1 LED (orange) input voltage
Residual Ripple	<= 1200 MV

Disclaimer: This documentation is not intended as a substitute for and is not to be used for determining suitability or reliability of these products for specific user applications

Connections - Terminals	For input connection: screw type terminals, connection capacity: 5 x 2.5...5 x 4 mm² AWG 14...AWG 11 For input ground connection: screw type terminals, connection capacity: 1 x 2.5...1 x 4 mm² AWG 14...AWG 11 For output connection: screw type terminals, connection capacity: 4 x 2.5...4 x 4 mm² AWG 14...AWG 11
Depth	141.0 mm
Height	108 mm
Width	87 mm
Net Weight	2.02 kg
Compatibility Code	ABL8F

Environment

Ip Degree Of Protection	IP20 conforming to EN/IEC 60529
Ambient Air Temperature For Operation	-20…60 °C
Ambient Air Temperature For Storage	-40…80 °C
Relative Humidity	0…95 % without condensation or dripping water
Operating Altitude	3000 m
Vibration Resistance	0.05 mm (f= 47…57 Hz) conforming to IEC 60068-1 0.7 gn (f= 13.9…47 Hz) conforming to IEC 60068-1 1 gn (f= 57…150 Hz) conforming to IEC 60068-1 1 mm (f= 3…13.9 Hz) conforming to IEC 60068-1
Safety Class	Class I conforming to VDE 0106-1
Dielectric Strength	2000 V between input and ground 4600 V between input and output 500 V between output and ground
Other Environmental Characteristic	EMC conforming to IEC 62041 Safety conforming to EN/IEC 61558-2-6 Safety conforming to UL 508 Safety conforming to UL 60950-1 EMC conforming to EN/IEC 61000-3-2

Packing Units

Unit Type Of Package 1	PCE
Number Of Units In Package 1	1
Package 1 Height	25.800 cm
Package 1 Width	18.800 cm
Package 1 Length	11.500 cm
Package 1 Weight	2.343 kg
Unit Type Of Package 2	P06
Number Of Units In Package 2	30
Package 2 Height	75.000 cm
Package 2 Width	60.000 cm
Package 2 Length	80.000 cm
Package 2 Weight	83.260 kg

Contractual warranty

Warranty	18 months

Sustainability

Green Premium™ label is Schneider Electric's commitment to delivering products with best-in-class environmental performance. Green Premium promises compliance with the latest regulations, transparency on environmental impacts, as well as circular and low-CO_2 products.

Guide to assessing product sustainability is a white paper that clarifies global eco-label standards and how to interpret environmental declarations.

Learn more about Green Premium >

Guide to assess a product's sustainability >

Transparency RoHS/REACh

Well-being performance

Mercury Free	
Rohs Exemption Information	Yes
Pvc Free	

Certifications & Standards

Reach Regulation	REACh Declaration
Eu Rohs Directive	Pro-active compliance (Product out of EU RoHS legal scope)
China Rohs Regulation	China RoHS declaration
Environmental Disclosure	Product Environmental Profile
Circularity Profile	End of Life Information

Dimensions Drawings

Dimensions

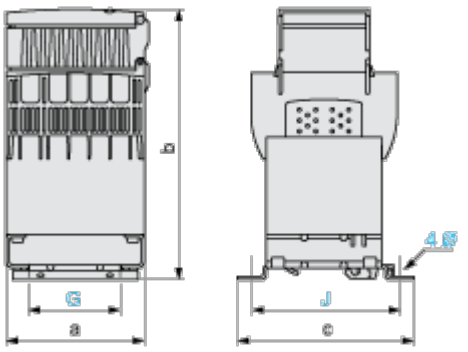

Dimensions in mm

a	b	c	G	J	Ø
87	142	108	60	96	5.5

Dimensions in in.

a	b	c	G	J	Ø
3.42	5.59	4.25	2.36	3.78	0.22

Connections and Schema

Internal Wiring Diagram

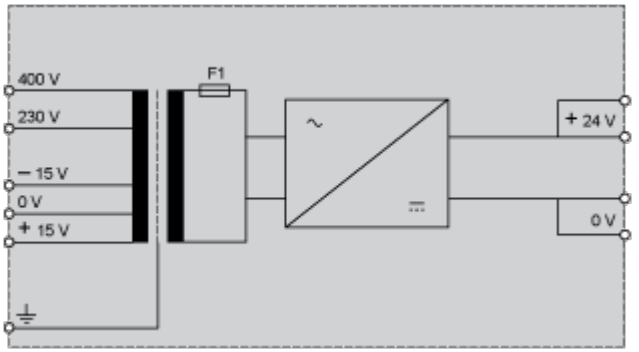

Performance Curves

Load Limits Curve

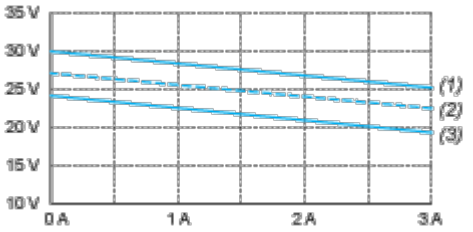

(1) Nominal line supply + 10%

(2) Nominal line supply

(3) Nominal line supply - 10%